TEKNOFEST

AEROSPACE AND TECHNOLOGY FESTIVAL

HELICOPTER DESIGN COMPETITION

FINAL DESIGN REPORT

TEAM NAME: We_Science

TEAM ID: 63137

TEAM MEMBERS:

1. Mustafa Ersin KARPAT
2. Tuğba MACİT
3. Konuralp CANBAZGİL
4. Emir GENÇ
5. Berk Gürbüz BİÇEN

TEAM LEADER: Mustafa Ersin KARPAT

Table of Contents

List of Figures

List of Tables

List of Symbols and Abbreviations

Symbols:

Nb	Number of Blades
c	Chord
C_d	Drag Coefficient
C_l	Lift Coefficient
R	Radius
α	Angle of Attack
σ	Solidity

Abbreviations:

FAA	Federal Aviation Administration
FAR	Federal Aviation Regulation
HOGE	Hover Out-of-Ground Effect
IFR	Instrument Flight Rules
ISA	International Standard Atmosphere
SFC	Specific Fuel Consumption
VFR	Visual Flight Rules
VTOL	Vertical Take-off and Landing

CAD DRAWINGS

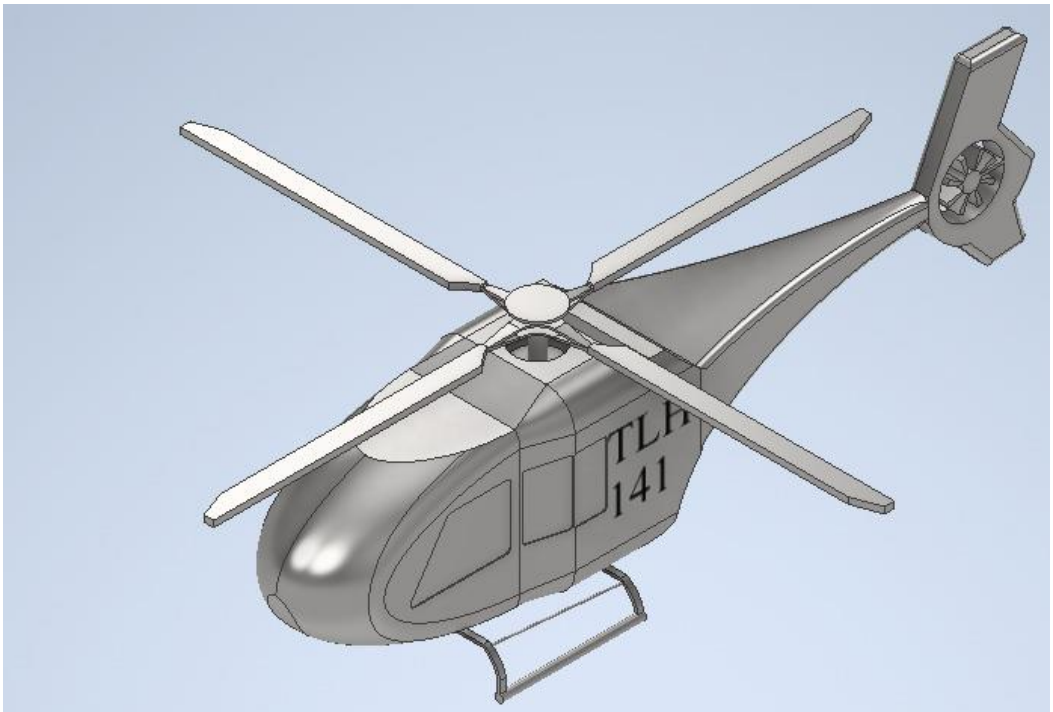

Profile View

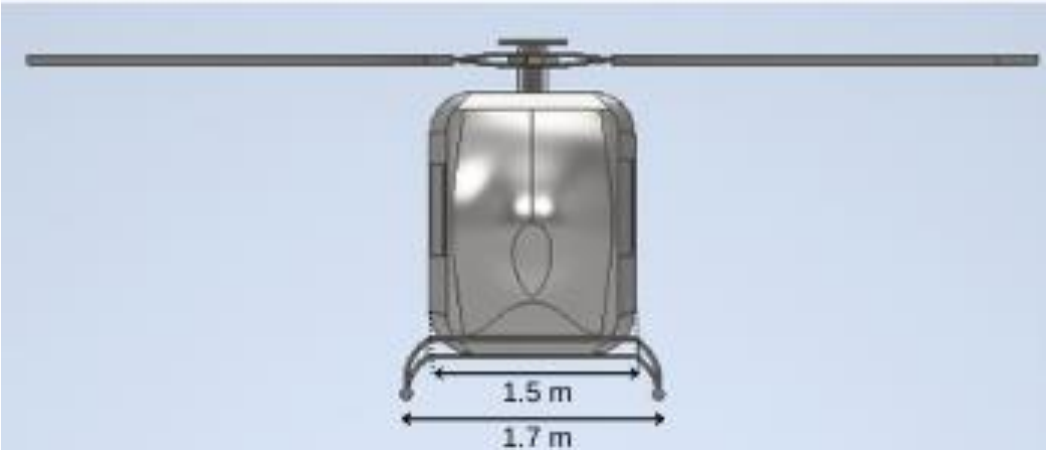

Front View

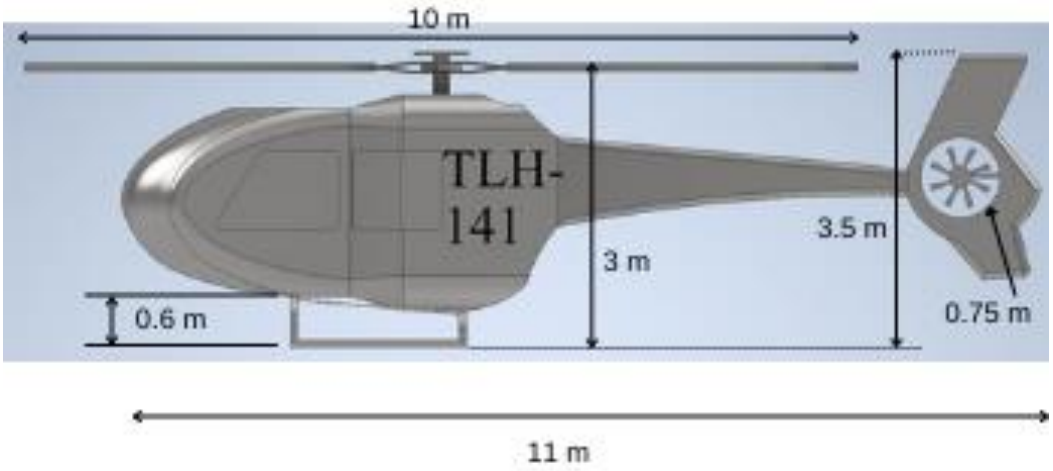

Side View

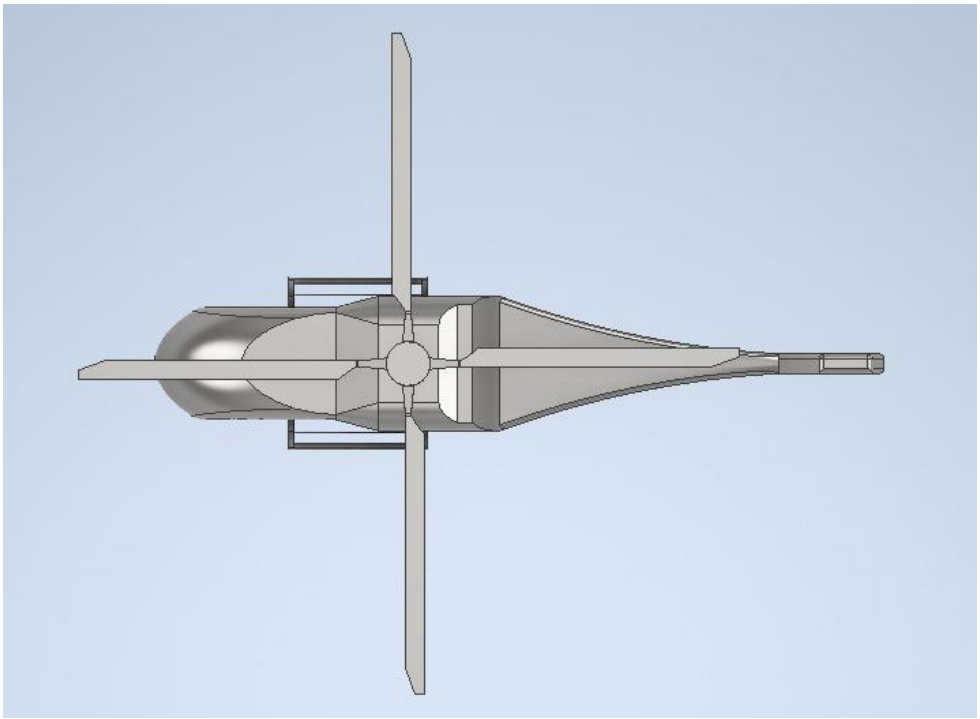

Top View

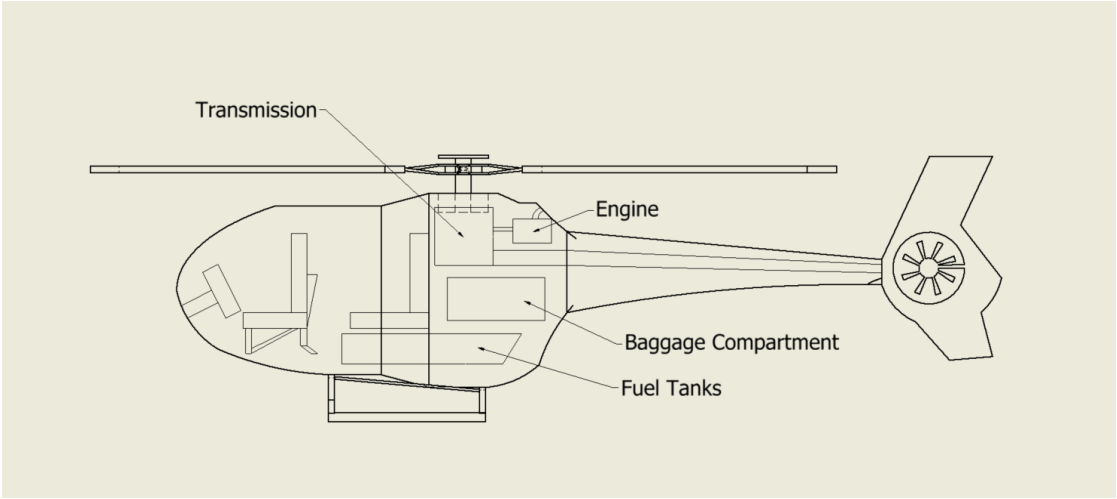

Interior View

Passenger Seat Design

Proposal Requirements Matrix

	Status	Section
General Vehicle Requirements		
1 pilot 4 passenger light helicopter	✓	**3**
Helicopter should be powered by turboshaft engine	✓	**6**
Mission Profile Requirements		
Aircraft must be capable of lifting the following payload to a distance 150 km at 4000 ft ISA+20°C: -1 crew of 90 kg. -4 passenger each 100 kg with luggage	✓	**4.1**
Aircraft must have reserve fuel sufficient to perform 15 min of flight at V_{BE}	✓	**8.5**
Performance Capability Requirements		
Continuous HOGE at 6000 ft (ISA+20°C MTOW)	✓	**7**
Range > 500 km (ISA+20°C MTOW)	✓	**7**
Minimum endurance >2.5 hours (ISA+20°C MTOW)	✓	**7**
Good autorotation capability	✓	**8.4**
Cost requirements		
Reduced acquisition cost is an important consideration: -Innovative manufacturing cost reduction techniques -Cost must be competitive with current market helicopters	✓	**2**

1.Introduction

"The idea of a vehicle that could lift itself vertically from the ground and hover motionless in the air was probably born at the same time that man first dreamed of flying." said Igor Ivanovitch Sikorsky in 1995. As it can be predicted, he is emphasizing the importance of helicopters. A helicopter can be defined as any flying machine using rotating wings (i.e., rotors) to provide lift, propulsion, and control forces. The helicopter can take off, fly forward or backwards, climb and descend, and move in almost any direction at the whim of the pilot. [18] There are several advantages of helicopters in terms of transportation, but the following can be listed as the most important ones. Helicopters can access remote areas and mountainous areas. They also require a much smaller landing area than conventional airplanes. Moreover, vertical takeoff and landing ability makes helicopters a well-suited choice for many cases.

This project is aimed to design a helicopter which meets the requirements given in Teknofest Aerospace and Technology Festival Competition. It is also aimed to design the helicopter such that it satisfies the conditions of the need in the competitive helicopter market.

2. Design Requirement Analysis

In today's helicopter market, there is a great demand for competitive designs in terms of different aspects. Other than meeting the needs of customers, engineers are expected to design the helicopters considering some other challenges such as being environmentally friendly, low cost, lowered noise, and comfortable. TLH-141 is, therefore, designed such that it is competitive in terms of maximum takeoff

weight, performance characteristics and operational and maintenance cost compared to the existing turbine engine powered light helicopter. Moreover, a comprehensive research is done to make adjustments in order to ensure a reduction in noise level specified by CS-36 certification.

Main requirements are listed for the design in Table 1.

Crew	1x90 kg
Passengers	4x100 kg
Minimum Hover Ceiling	6000 ft. (ISA+20°C, MTOW)
Minimum Range	500 km at 4000 ft ISA+20°C, MTOW
Minimum Endurance	2.5 h at 4000 ft ISA+20°C, MTOW
Design Gross Weight	<1500 kg
Cruise Speed	>172 km/h
Safety	K>1.35
Useful Load	490 kg
Cost	1.5-2 Million $ (Estimated)
Weight Fraction	<0.45
Tip Speed	650 fps
Avionics	VFR/IFR

Table 1 Main Requirements List

2.1. Mission Profile Analysis

In this mission, four passengers, 100 kg each with belongings, are carried. A simple mission profile is illustrated below in Figure 1.

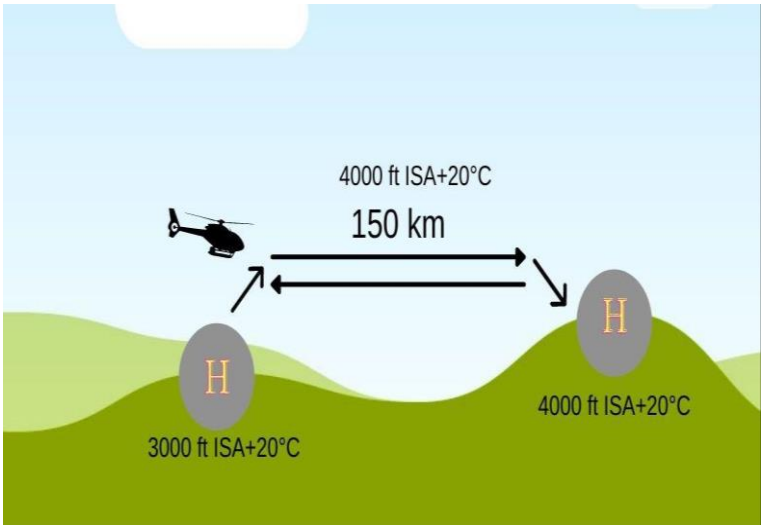

Figure 1 Simple Mission Profile

Detailed information about the mission profile segments is provided in Table 2.

#	Segment	Altitude and Temperature	Distance [km]	Duration [min]	Payload [kg]	Description
1	Ground Run	3000 ft ISA+20°C	-	10 min	400 kg	Engine start and warm up
2	Take-Off HOGE	3000 ft ISA+20°C	-	2 min	400 kg	-
3	Climb	4000 ft ISA+20°C	*	2 min	400 kg	Climb to 4000 ft with 500 ft/min
4	Cruise	4000 ft ISA+20°C	150 km	**	400 kg	-
5	Landing HOGE	4000 ft ISA+20°C	-	1 min	400 kg	Landing to deploy passengers/cargo
6	Ground Run	4000 ft ISA+20°C	-	1 min	0 kg	Deploy passengers
7	Take-Off HOGE	4000 ft ISA+20°C	-	1 min	0 kg	-
8	Cruise	4000 ft ISA+20°C	150 km	**	0 kg	-
9	Descent at V_Y	3000 ft ISA+20°C	*	2 min	0 kg	Descent to 3000 ft with 500 ft/min
10	Landing HOGE	3000 ft ISA+20°C	-	2 min	0 kg	-
11	Reserve	4000 ft ISA+20°C	-	15 min	0 kg	15 minutes flight capability at V_{BE} with reserve fuel

Table 2 Mission Profile Segments

* Climb and descent distances will be included in the cruise segment.

** Total time of mission profile included reserve is 120 minute or faster.

3.Configuration Selection

In this part, a sensitivity analysis is done to determine feasible concepts for TLH-141. Considerations are mainly focused on safety, affordability and ease of use. Mission profile and main requirements are also considered while selecting the configuration.

Rotorcraft types, anti-torque system types, hub types and landing gear types are listed and scored. While the highest score emphasizes perfect choice, the lowest score emphasizes the type as not feasible. Below, score tables are provided for 4 main systems. This scoring process is done by team members carefully at the end of a comprehensive literature and market research.

Rotorcraft types	See Table 3
Rotor hub types	See Table 4
Landing gear types	See Table 5
Anti-torque system types	See Table 6

Description	SMR	Compound	Co-Axial
Productivity Index	68	53	41
Safety Index	25	0	50
Cost Index	25	20	22
Total	118	73	113

Table 3 Rotorcraft types

Weight	Criteria	Teetering	Articulated	Hingeless	Bearingless
20	**Initial Cost**	4	3.5	3	1
15	**O&S**	3	1	4	5
20	**Safety**	3	3	3	4
10	**Reliability**	4	2	4	5
15	**Weight**	3	2	4	5
10	**Ease of Use**	3	2	3.5	4
100		310	245	355	390

Table 4 Rotor hub types

Weight%	Criteria	Metal Skid	Comp Skid	Retractable	Fixed Wheel
15	**Initial Cost**	4	3	5	3
15	**DOC**	5		5	2
25	**Safety**	4	4	2	5
15	**Reliability**	5	5	5	3
15	**Weight**	3	4	5	2
10	**Ease of Use**	5	5	4	3
5	**Productivity**	3	4	4	4
100		420	410	410	325

Table 5 Landing gear types

Weight%	Criteria	Tail Rotor	Fenestron	Notar
20	**Initial Cost**	5	2	1
15	**O&S**	4	3.5	3
20	**Safety**	1	4	5
10	**Reliability**	4	3	2
15	**Noise**	1	3	5
10	**Ease of Use**	4	4	3
10	**Productivity**	5	4	3.5
100		325	327.5	325

Table 6 Anti-torque system types

3.1. General Layout

Conducting a sensitivity analysis and gathering the useful information, team members scored the main system types above in tables. According to final scores, the system types are selected from the ones with the highest total score. A general layout of the TLH-141 is finally decided as shown below.

Single Main Rotor
Fenestron Anti-torque System
Bearingless Hub
Single Turboshaft Engine
Skid Landing Gear

3.2. Market Research

Market research is done by comparing the current helicopters in the market with the consideration of requirement list and general layout of TLH-141. Some of the key characteristics considered are MTOW, cruise speed and payload capability. Selected helicopters and their characteristics are listed in Table 7.

Helicopter Name	Airbus EC120	Bell-505	MD-500
Gross Weight	1715 kg	1669 kg	1610 kg
Empty Weight	960 kg	989 kg	921 kg
Useful Load	755 kg	680 kg	689 kg
Rotor Diameter	10 m	11.28 m	8.05 m
Length	11.52 m	12.93 m	7.28 m
Maximum Airspeed	237 km/h	231 km/h	282 km/h
Cruise Airspeed	194 km/h	230 km/h	250 km/h
Maximum Range	770 km	566 km	537 km
Maximum Endurance	4.56 hours	3.9 hours	2.8 hours
Powerplant	Arrius 2F	Safran Arrius 2R	Allison 250-C30
Seating	1+4	1+4	2+3

Table 7 Market Research

3.3. Base Helicopter

Considering market research, limitations and configuration layout, a base helicopter is chosen to gather some key characteristics and priori data. From the helicopters listed in Table 7, "EC-120 Helicopter" is determined to be the base helicopter. Priori information for EC-120 helicopter is listed in Table 8.

η_h	0.88	Hover efficiency
η_c	0.89	Propulsive efficiency
L/D	5.60	Lift to drag ratio
M	0.75	Figure of merit
K	0.06	Weight factor for non-self-sealing tanks
C	0.5	Fuel consumption
e_d	0.03	Download (assumed 0.03cfor all RW)
N	1	Number of engines
γ	1	Ground effect parameter
h_p	9850	Hover altitude
t_h	15	Total hover time
V_c	120 knots	Cruise speed
R	400 nm	Range
t_r	20	Reserve time
t_s	20	Temperature difference from ISA

Table 8 EC-120 Priori Information

4.Vehicle Sizing Methodology

4.1. R_F Method

The R_f Method, a preliminary sizing and performance technique used to design and evaluate vertical take-off and landing (VTOL) and conventional fixed wing aircraft, was used for this proposal. It uses a fuel balance, or R_f, approach to determine an optimized gross weight solution for a given vehicle sizing condition. Figure 2 shows the R_f method, consisting of two design loops to determine vehicle power loading and vehicle gross weight. The power loading loop produces a ratio of power available, and power required while the gross weight loop produces a ratio of fuel available, and fuel required (Figure 3). By iterating on both loops, an optimized solution for minimum gross weight and required installed power can be achieved when the fuel available equals the fuel required and the power available equals the power required.

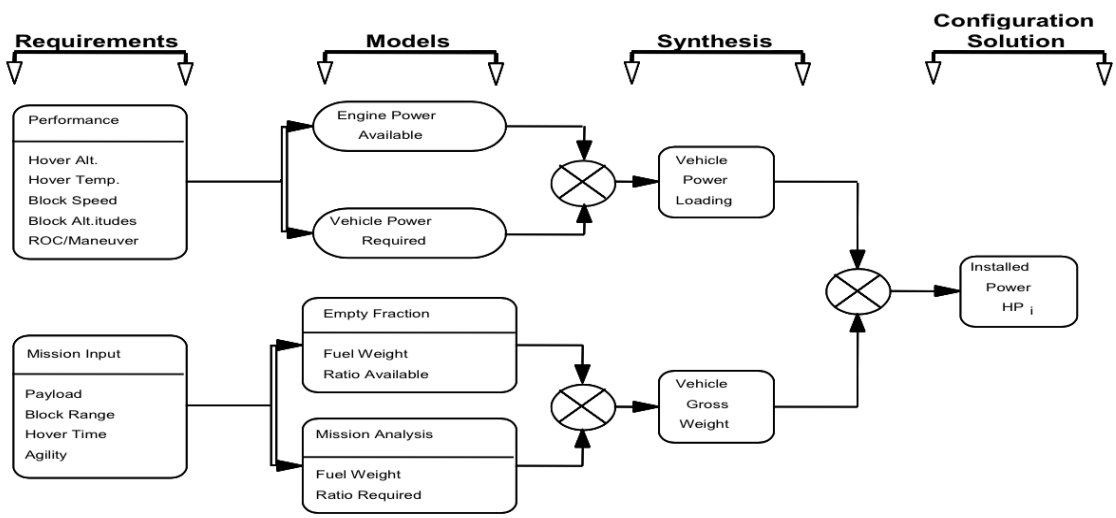

Figure 2 Rf Method

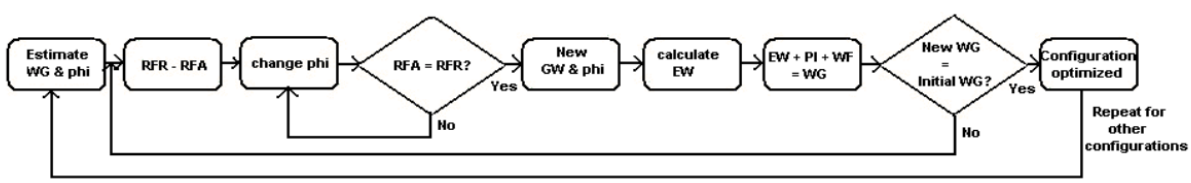

Figure 3 Power Loading Loop

The sizing conditions can be summarized as TLH-141 must be capable of lifting the following payload to a distance 150 km at 4000 ft ISA+20°C: 1 crew of 90 kg and 4 passenger each 100 kg with luggage.

4.2. R_F Method Results

Implementing R_F method, iterations are done to determine the weight distribution of components and priori dimensions. Iteration method is shown in Figure 4. Obtained results for weight estimations and sizing are provided in Table 9 and Table 10, respectively.

S15 =iterations!8883

	A	B	C	D	E	F	G	H	I	J	K	L	M	N	O	P	Q	R	S
1	w=			5,4			5,5			5,6			5,7			5,8			5
2	WG	Phi	Rfr w=5,4	Rfa w=5,4	Phi	Rfr w=5,5	Rfa w=5,5	Phi	Rfr w=5,6	Rfa w=5,6	Phi	Rfr w=5,7	Rfa w=5,7	Phi	Rfr w=5,8	Rfa w=5,8	Phi	Rfr w=5,9	Rfa w=5,9
3	3230	0,4442926124	0,1750322601	0,1737644903	0,4418941873	0,1771778965	0,1760271555	0,4395737966	0,1793461016	0,1782162034	0,4373276792	0,1815365433	0,1803335182	0,4351523168	0,1837489039	0,1823874107	0,4330444139	0,1859828818	0,1843759
4	3231	0,4442855223	0,1750178173	0,1738796556	0,4418807026	0,1771632169	0,1761424101	0,4395665202	0,1793311834	0,1783315444	0,4373203141	0,1815213843	0,1804506068	0,4351448655	0,1837335028	0,1825029167	0,4330368791	0,1859672366	0,1844915
5	3232	0,4442784391	0,1750033843	0,1739947474	0,4418798247	0,1771485474	0,1762575911	0,4395592508	0,1793162754	0,1784468118	0,4373129558	0,181506236	0,1805665958	0,4351374212	0,1837181123	0,1826163492	0,4330293512	0,1859516021	0,1846070
6	3233	0,4442713625	0,1749889612	0,1741097657	0,4418726536	0,1771338878	0,1763726986	0,4395519861	0,1793013776	0,1785620058	0,4373056044	0,1814991098	0,1806812357	0,4351299836	0,1837027324	0,1827337081	0,4330218302	0,1859359783	0,1847225
7	3234	0,4442642928	0,1749745479	0,1742247107	0,4418654893	0,1771192383	0,1764877328	0,4395447322	0,1792864899	0,1786771263	0,4372982598	0,1814759704	0,1807964399	0,435122553	0,1836873629	0,1828489935	0,433014316	0,1859203651	0,1846378
8	3235	0,4442572298	0,1749601444	0,1743395823	0,4418583318	0,1771045988	0,1766026936	0,4395374832	0,1792716124	0,1787921735	0,437290922	0,1814608531	0,1809115708	0,4351151292	0,1836720039	0,1829642055	0,4330068087	0,1859047627	0,1849531
9	3236	0,4442501735	0,1749457508	0,1744543807	0,4418511811	0,1770899692	0,1767175811	0,4395302409	0,1792567451	0,1789071473	0,437283591	0,1814457461	0,1810266283	0,4351077122	0,1836566555	0,1830753442	0,4329993083	0,1858891709	0,1850684
10	3237	0,444243124	0,174931367	0,1745691059	0,4418440371	0,1770753496	0,1768323954	0,4395230054	0,1792418879	0,179022046	0,4372762665	0,1814306494	0,1811416127	0,435100302	0,1836413175	0,1831944097	0,4329918147	0,1858735098	0,1851835
11	3238	0,4442360812	0,1749169929	0,174683759	0,4418368999	0,17706074	0,1769471367	0,4395157767	0,1792270408	0,1791368756	0,4372689496	0,1814115563	0,1812565238	0,4350928987	0,18362599	0,1833054019	0,432984328	0,1858580193	0,1852906
12	3239	0,4442290452	0,1749026287	0,1747983371	0,4418297694	0,1770461403	0,1770618048	0,4395085548	0,1792122038	0,1792516299	0,4372615639	0,1814004869	0,1813713618	0,4350855023	0,1836106729	0,183424321	0,4329768482	0,1858424594	0,1854136
13	3240	0,4442220158	0,1748882742	0,1749128432	0,4418226457	0,1770315506	0,1771764	0,4395013397	0,179197377	0,1793663113	0,4372543352	0,1813854211	0,1814861269	0,4350781126	0,1835953663	0,1835391167	0,4329693752	0,1858269102	0,1855285
14	3241	0,4442149932	0,1748739295	0,1750272764	0,4418155287	0,1770169708	0,1772909222	0,4394941313	0,1791825603	0,1794809198	0,4372470383	0,1813703656	0,1816008188	0,4350707297	0,1835800701	0,1836539401	0,432961909	0,1858113715	0,1856433
15	3242	0,4442079773	0,1748595946	0,1751416368	0,4418084184	0,177002401	0,1774053715	0,4394869296	0,1791677536	0,1795954553	0,4372397481	0,1813553203	0,1817154379	0,4350633537	0,1835647844	0,1837686402	0,4329544496	0,1857958435	0,1857581
16	3243	0,444200968	0,1748452694	0,1752559244	0,4418013149	0,1769987841	0,1775197481	0,4394797348	0,1791529571	0,1797099181	0,4372324647	0,1813402853	0,1818299842	0,4350559844	0,1835495091	0,1838832675	0,432946997	0,1857803261	0,1856728
17	3244	0,4441939655	0,174830954	0,1753701393	0,4417942181	0,176973291	0,177634052	0,4394725466	0,1791381706	0,1798243081	0,437225188	0,1813252605	0,1819444577	0,4350486219	0,1835342442	0,1839978219	0,4329395513	0,1857648192	0,1859875
18	3245	0,4441869697	0,1748166483	0,1754842816	0,441787128	0,1769587508	0,1777482832	0,4394653652	0,1791233942	0,1799386254	0,4372179181	0,181310246	0,1820588685	0,4350412662	0,1835189697	0,1841123037	0,4329321124	0,1857493229	0,1861020
19	3246	0,4441799805	0,1748023523	0,1755983513	0,4417800446	0,1769442206	0,1778624418	0,4394581905	0,1791086278	0,1800528702	0,437210655	0,1812952416	0,1821731867	0,4350339173	0,1835037455	0,1842267128	0,4329246802	0,1857338372	0,1862165
20	3247	0,444172998	0,174788066	0,1757123485	0,4417729679	0,1769297002	0,1779765279	0,4394510226	0,1790938714	0,1801670423	0,4372033986	0,1812802475	0,1822874423	0,4350265752	0,1834885118	0,1843410493	0,4329172549	0,185718362	0,1863309
21	3248	0,4441660222	0,1747737894	0,1758262733	0,4417658979	0,1769151897	0,1780905416	0,4394438613	0,1790791251	0,1802811421	0,4371961489	0,1812652636	0,1824016254	0,4350192398	0,1834732684	0,1844553133	0,4329098363	0,1857028973	0,1864453
22	3249	0,444159053	0,1747595226	0,1759401258	0,4417588345	0,1769006891	0,1782044828	0,4394367068	0,1790643889	0,1803951694	0,437188906	0,1812502899	0,1825157361	0,4350119112	0,1834580754	0,1845695049	0,4329024245	0,1856874432	0,1866595
23	3250	0,4441520905	0,1747452654	0,1760539059	0,4417517779	0,1768861982	0,1783183516	0,439429559	0,1790496626	0,1805091243	0,4371816698	0,1812353263	0,1826297745	0,4350045893	0,1834428727	0,184663624	0,4328950195	0,1856719996	0,1866737
24	3251	0,4441451346	0,1747310179	0,1761676138	0,4417447279	0,1768717173	0,1784321485	0,4394224179	0,1790349463	0,180623007	0,4371744404	0,1812203729	0,1827437405	0,4349972742	0,1834276804	0,1847976709	0,4328876213	0,1856565665	0,1867879
25	3252	0,4441381854	0,17471678	0,1762812496	0,4417376846	0,1768572461	0,178545873	0,4394152834	0,1790202401	0,1807368175	0,4371672176	0,1812054297	0,1828576343	0,4349899658	0,1834124983	0,1849116455	0,4328802290	0,1856411439	0,1869019
26	3253	0,4441312428	0,1747025518	0,1763948132	0,4417306448	0,1768427848	0,1786595254	0,4394081557	0,1790055438	0,1808505558	0,4371600015	0,1811904966	0,182971456	0,4349826641	0,1833973266	0,1850255479	0,432872845	0,1856257317	0,1870159
27	3254	0,4441243068	0,1746883333	0,1765083049	0,4417236179	0,1768283333	0,1787731057	0,4394010346	0,1789908575	0,1809642221	0,4371527922	0,1811755737	0,1830852055	0,4349753691	0,1833821653	0,1851393782	0,4328654671	0,1856103301	0,1871298
28	3255	0,4441173775	0,1746741243	0,1766217246	0,4417165946	0,1768138916	0,1788866141	0,4393939202	0,1789761811	0,1810778164	0,4371455895	0,1811606608	0,183198883	0,4349680809	0,1833670142	0,1852531365	0,4328580950	0,1855949389	0,1872436
29	3256	0,4441104548	0,1746599251	0,1767350724	0,4417095779	0,1767994597	0,1790000506	0,4393868124	0,1789615147	0,1811913387	0,4371383935	0,1811457582	0,1833124686	0,4349607994	0,1833518733	0,1853668227	0,4328507313	0,1855755561	0,187357
30	3257	0,4441035386	0,1746457354	0,1768483483	0,4417025678	0,1767850375	0,1791134152	0,4393797113	0,1789468583	0,1813047892	0,4371312042	0,1811308656	0,1834260223	0,4349535245	0,1833367428	0,1854804371	0,4328433735	0,1855641879	0,1874711
31	3258	0,4440966291	0,1746315553	0,1769615525	0,4416955643	0,1767706252	0,179226708	0,4393726169	0,1789322118	0,1814181678	0,4371240216	0,1811159831	0,1835394641	0,4349462564	0,1833216225	0,1855939796	0,4328360224	0,185548828	0,1876847
32	3259	0,4440897261	0,1746173849	0,177074685	0,4416885675	0,1767562225	0,1793399291	0,439365529	0,1789175752	0,1815314748	0,4371168457	0,1811011107	0,1836528742	0,434938995	0,1833065125	0,1857074503	0,432828678	0,1855334786	0,1876983
33	3260	0,4440828298	0,174603224	0,1771877459	0,4416815772	0,1767418297	0,1794530785	0,4393584479	0,1789029485	0,181644471	0,4371096764	0,1810862484	0,1837661926	0,4349317402	0,1832914127	0,1858208493	0,4328213403	0,1855181395	0,1878117
34	3261	0,44407594	0,1745890727	0,1773007353	0,4416745936	0,1767274466	0,1795661564	0,4393513733	0,1788883317	0,1817578737	0,4371025137	0,181071396	0,1838794393	0,4349244921	0,1832763232	0,1859341767	0,4328140093	0,1855028109	0,1878251
35	3262	0,4440690568	0,174574931	0,1774136531	0,4416676166	0,1767130732	0,1796791628	0,4393443054	0,1788737248	0,1818709658	0,4370953577	0,1810565539	0,1839926145	0,4349172507	0,1832612439	0,1860474325	0,4328066651	0,1854874927	0,1880385
36	3263	0,4440621802	0,1745607988	0,1775264995	0,4416606461	0,1766987095	0,1797920977	0,4393372441	0,1788591278	0,1819839864	0,4370882083	0,1810417218	0,1841057182	0,434910016	0,1832461748	0,1861406167	0,4327993675	0,1854721848	0,1881517
37	3264	0,4440553101	0,1745466762	0,1776392746	0,4416536823	0,1766843555	0,1799049612	0,4393301894	0,1788445407	0,1820969356	0,4370810656	0,1810268997	0,1842187505	0,434902879	0,1832311159	0,1862737295	0,4327920565	0,1854568874	0,1882649
38	3265	0,4440484466	0,1745325631	0,1777519783	0,441646725	0,1766700113	0,1800177534	0,4393231413	0,1788299635	0,1822098135	0,4370739295	0,1810120876	0,1843317114	0,4348955664	0,1832160672	0,1863861771	0,4327847523	0,1854416002	0,1883781
39	3266	0,4440415896	0,1745184596	0,1778646109	0,4416397743	0,1766556767	0,1801304744	0,4393160998	0,1788153961	0,1823226201	0,4370668	0,1809972855	0,1844446011	0,4348883516	0,1832010287	0,1864997411	0,4327774647	0,1854263235	0,1884911
40	3267	0,4440347392	0,1745043655	0,1779771722	0,4416328302	0,1766413518	0,1802431242	0,4393090649	0,1788008385	0,1824353555	0,4370596772	0,1809824935	0,1845574195	0,4348811434	0,1831860004	0,18661264	0,4327701638	0,1854110571	0,1886041
41	3268	0,4440278953	0,174490281	0,1780896625	0,4416258926	0,1766270366	0,1803557028	0,4393020366	0,1787862908	0,1825480198	0,4370525609	0,1809677115	0,1846701667	0,4348739419	0,1831709622	0,1867254676	0,4327628795	0,185395801	0,1887170
42	3269	0,444021058	0,17476206	0,1782020817	0,4416189616	0,1766127311	0,1804682104	0,4392950149	0,1787717529	0,1826606129	0,4370454512	0,1809529394	0,1847828428	0,434866747	0,1831559742	0,1868362242	0,4327556019	0,1853805552	0,1888298
43	3270	0,4440142271	0,1744621405	0,17831443	0,4416120371	0,1765984352	0,180580647	0,4392879997	0,1787572248	0,1827731351	0,4370383482	0,1809381773	0,1848954479	0,4348595587	0,1831409763	0,1869509097	0,4327483309	0,1853653197	0,1889426
44	3271	0,4440074028	0,1744480445	0,1784267074	0,4416051192	0,176584149	0,1806930127	0,4392809911	0,1787427065	0,1828855863	0,4370312517	0,1809234252	0,185007982	0,434852377	0,1831259686	0,1870635242	0,4327410665	0,1853500946	0,1890553
45	3272	0,444000585	0,174434038	0,1785389139	0,4415982078	0,1765698724	0,1808053075	0,4392739891	0,1787281981	0,1829979667	0,4370241618	0,1809086831	0,1851204452	0,4348452019	0,1831110109	0,1871760678	0,4327338688	0,1853348797	0,1891679
46	3273	0,4439937737	0,1744200009	0,1786510497	0,4415913029	0,1765556054	0,1809175316	0,4392669936	0,1787136994	0,1831102762	0,4370170785	0,1808939509	0,1852328376	0,4348380334	0,1830960434	0,1872885405	0,4327265572	0,1853196751	0,1892804

Base Helicopter | Iterations | charts | Graphic | Kesfedin

Figure 4 Rf Method Iteration

RESULTS	lb	kg
W_G (Gross Weight)	3240	1472.727
W_{MR} (Main Rotor Weight)	378.33	171.968
W_{TR} (Tail Rotor Weight)	24.17	10.986
W_T (Engine Weight)	63.89	29.040
W_{PS} (Power Shaft Weight)	22.28	10.127
W_{DS} (Drive Shaft Weight)	204.72	93.055
W_{FC} (Flight Controls Weight)	188.17	85.521
W_{LG} (Landing Gear Weight)	120.14	54.609
W_F (Fuselage Weight)	296.82	134.918
W_{Misc} (Miscellaneous Weight)	125.00	56.818
W_E (Empty Weight)	1423.56	647.076

Table 9 Rf Method Results

SIZING	ft	m
R	13.57	4.137
$L_{fuselage}$	21.71	6.619
$L_{main\ rotor}$	16.42	5.006
$D_{tail\ rotor}$	2.71	0.827
$C_{lr,main,tail}$	0.67	0.206

L_{total}	32.70	9.971

Table 10 Rf Method Results

5. Main Rotor and Hub Design

5.1. Hub Selection Trade Study

For the hub selection, a wide research is done by group members and concluded the following information: while the two- bladed hub system offers a simple and well-proven design solution, the Hanson hub model represents an essential element of the "ideal rotor" and presents a unique opportunity in that its benefits are highly appealing. The historical precedence for the Hanson hub design was a successful flight on an autogiro by Tom Hanson in 1970. The Hanson hub is based on a flexure design which uses a series of straps integrated into the blade structure to achieve "elastic articulation" – eliminating the need for the usual flapping, feathering, and lead-lag bearings.[16] Control inputs are provided to each blade through a combination of two torque tubes which provide structural redundancy (See Figure 5). The flight controls are located within a non-rotating mast and operate through a swashplate above the rotor system (See Figure 6); this arrangement helps to protect the flight controls which are typically fragile. Figure 5 shows the design taken from Hanson's Handbook. [16]

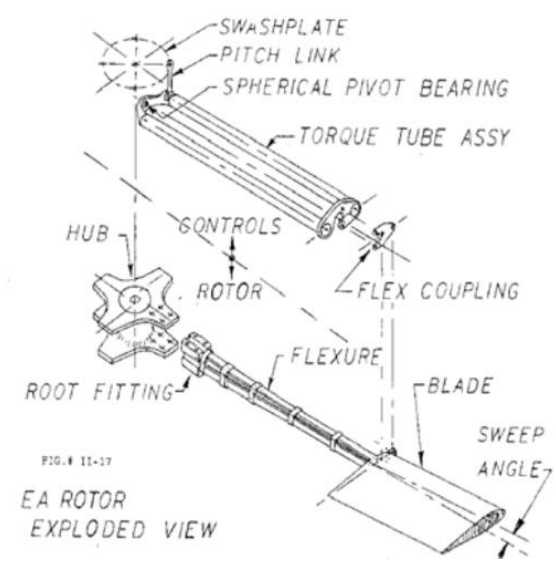

Figure 5 The Hanson Hub[16]

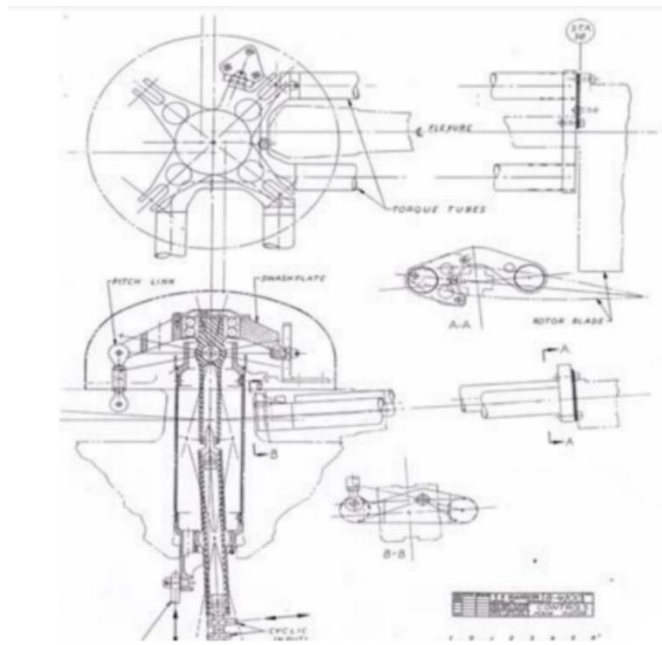

Figure 6 Hanson Swashplate Controls[16]

5.2. Main Rotor Blade Design

5.2.1. Airfoil Selection

In the airfoil selection part, a comprehensive literature survey has been done. It is known that today's rotorcraft airfoils come in a variety of shapes and sizes. The most crucial part of the main rotor design phase is choosing the right airfoil. In addition, the helicopter's mission profile is the decisive factor

in this selection. According to the mission profile, the airfoil must perform well at high altitudes, in hot weather, and in high-speed conditions.

Firstly, symmetric NACA0012 airfoil is being used for thrust calculations. The NACA 0012 airfoil has a low maximum lift coefficient, which results in a low stall margin and restricted maneuverability. Also, NACA0012 airfoil is a symmetrical airfoil. It is common knowledge that, unlike the symmetrical airfoils, the nonsymmetrical airfoils (Cambered) can produce lift at zero angle of attack. The advantages of nonsymmetrical airfoils are more lift production at a given AOA than a symmetrical design, an improved lift-to-drag ratio, and better stall characteristics. From this point, we concluded that choosing a nonsymmetrical (cambered) airfoil for our design would be wise and more reliable. Secondly, a cambered airfoil Boeing/VertolVR-7 was considered, and thrust calculations were made for this airfoil. The VR-7 airfoil has higher maximum lift coefficients, but it also has high drag rates for moderate main rotor RPMs like the LUH design.

As a result of the study, the SC1095 airfoil is chosen as it satisfies the mission objectives. The selected airfoil SC1095 is also used and proved itself on the main rotor blade of the UH–60A Black Hawk helicopter over three decades. Moreover, the data, experiment, and research paper available potential for the airfoil also satisfies our team. This will help in the manufacturing phase.

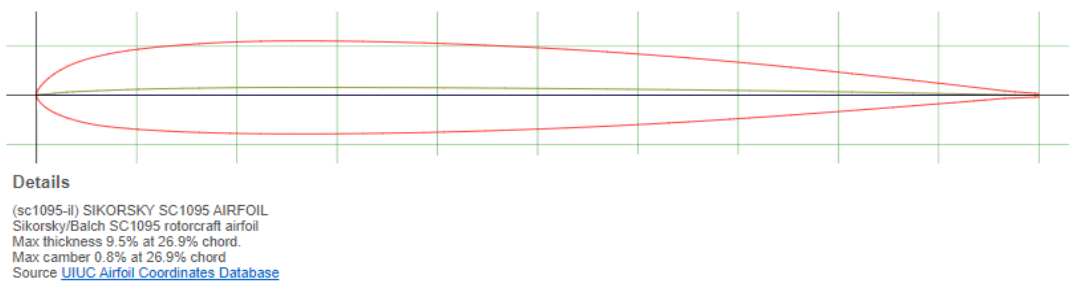

Figure 7 SC1095 Airfoil

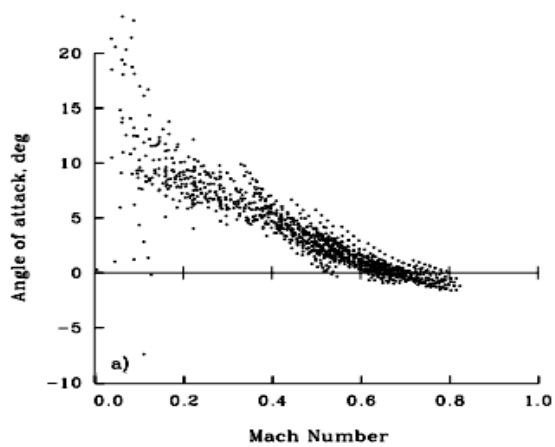

Figure 8 Mach number vs alpha curve for SC1095 airfoil [6]

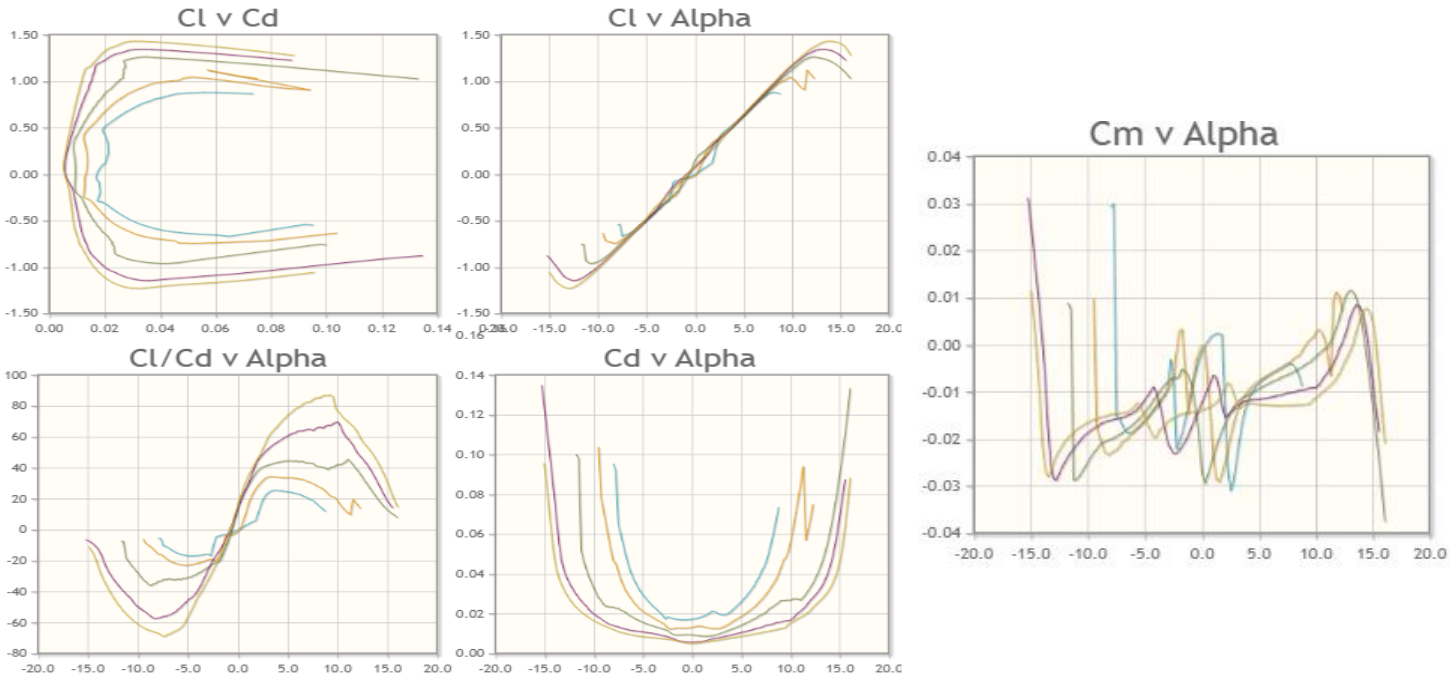

Figure 9 Cl-Cd-Cm-Alpha Relation for SC1095 Airfoil [25]

5.2.2. Blade Twist

In hover, high negative blade twist causes more uniform inflow across the blade – helping to reduce induced power and improve the figure of merit. Forward flight performance and vibratory loads limit this negative blade twist to a maximum of approximately 15° before performance losses result from the reduced angle of attack at the tip of the advancing blade.[18] Therefore, a main rotor blade negative linear twist of 10° was selected as the best compromise between maximizing the TLH-141's hover performance without significantly impacting its forward flight capability.

5.2.3. Blade Tip Shape

The tips of the blades play a very important role in the aerodynamic performance of the rotor. The blade tips encounter the highest dynamic pressure and highest Mach numbers, and strong trailed tip vortices are produced there. A poorly designed blade tip can have serious implications on the rotor performance. Figure 10 shows some blade tip designs that have been used or proposed for helicopter rotors. There are several common designs, comprising those with taper, those with sweep, and those with sweep, and those with a combination of sweep and taper.

Sweeping the leading edge of the blade reduces the Mach number normal to the leading edge of the blade, so allowing the rotor to attain a higher advance ratio before compressibility effects manifest as an increase in power required. The use of sweep also affects tip vortex formation, its location after it has been trailed from the blade, and the overall vortex structure. [18]

From the blade tip shapes shown in Figure 10, Leading edge swept tip is selected for this design. Sweep angle is selected to be -20 degree.

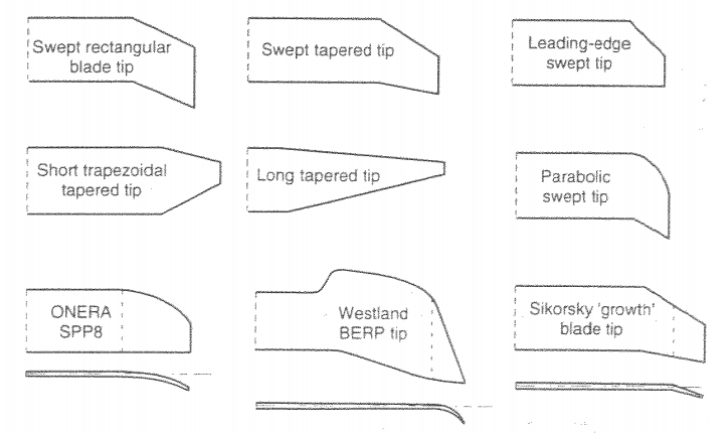

Figure 10 Some Advanced Main Rotor Blade Tip Designs [18]

5.3. Tail Rotor Blade Design

5.3.1. Anti-Torque System Selection

While designing the anti-torque system, we have focused on efficiency, noise emission, and manufacturing and operating costs. All the following options are considered; the conventional tail rotor, fenestron (ducted fan) tail and NOTAR (No Tail Rotor). We wanted to make our design efficient, so the conventional tail rotor design was eliminated. Also, the conventional tail rotor fell behind in the safety category. NOTAR design is also more efficient and safer, but it has some drawbacks. Firstly, it is a very expensive concept compared to other concepts. Secondly, it is less efficient than the other two. Lastly, it is not a widely used and produced concept. Thus, its availability is worse. Fenestron on the other hand, was the best choice overall since its advantages outweighed its disadvantages. After the calculations, Tail rotor is placed at 6.33 m (20 ft) from the main rotor hub.

5.3.1.1. Selection Parameters

1. Efficiency

Fenestrons are proven to be more efficient than conventional tail rotors. Since the fenestron is basically a ducted fan, tip speed losses are terminated. This improves the efficiency of fenestrons. Also, fenestrons are advantageous in forward flight. Since our mission profile is mostly based on forward flight and requires a little hover time, it will be beneficial to use fenestron tail rotor. These two factors reduce the power consumed by tail rotor.

2. Safety

Fenestrons are made of ducted blades. This greatly improves the safety. A ducted fan is safer on the ground for both passengers and the ground crew. Additionally, fenestron tail rotor is safer for tail rotor impacts. For example, while cruising above urban are or a forest, helicopters tail rotors are sometimes crashed to objects. This situation may result in the loss of anti-torque system and causes unwanted accidents for helicopter with conventional tail rotors. On the other hand, fenestron tail rotors are safer and more durable against impacts and strikes.

3. Noise

Fenestron tail rotors have lower noise emissions than conventional tail rotors. Firstly, it reduces the BVI (Blade Vortex Interaction) which is a source of noise. Secondly, it has 8 unevenly spaced blades. Blades disturb the air passing through the duct with different frequencies and reduces the noise

emission. Also, fenestron tail rotor design reduces the noise directly below the helicopter, which is very important for urban areas.

5.3.2. Fenestron Design

1. Chord Length: Following the historical data, 1/4th of the main rotor chord length is chosen, which is 0.09 m.
2. Tail Rotor Length: After the RF method calculations, tail rotor diameter is chosen to be 0.8 m (2.62 ft).
3. Airfoil Selection: Airfoil section SC-1095 is chosen since it is a modern, efficient, and proven airfoil.
4. Selection of Tip speed: Lower tip speeds are desired for lower noise emission. But too low tip speeds may result in the loss of anti-torque effect at high crosswinds. Thus, we needed find a mean value. A speed of 634 ft/s is chosen to make sure the tail rotor performance is not affected by crosswinds while lowering the noise emission. The tail rotor's RPM values is 4700.

5.3.3. Performance Analysis

5.3.3.1. Thrust and Power Values

To counter the torque effect of the main rotor, our tail rotor needed to produce 810 N of thrust. We fixed the thrust value and took the RPM and chord length values as variables. After a trade-off study, these values got fixed to produce the required thrust. Using the blade element theory, power required to drive the tail rotor was calculated as 20 hp.

6.Engine Selection and Transmission Design

The size, role, and functionality of a helicopter are determined by the number, size, and type of engine(s) used. The first helicopter engines were basic mechanical devices like spindles or rubber bands, which narrowed helicopter size to small models and toys. For a half-century until the first airplane flight, steam engines were being used to advance helicopter aerodynamics' understanding. However, due to the steam engines' limited power, the human-crewed flight was not practical. The development of the internal combustion engine in the late nineteenth century marked a turning point in helicopter technology; as the engines became powerful enough to produce lift for helicopters, manned flights were started.

Turbine engines reshaped the aerospace industry, and finally, the turboshaft engines provided the last touch to helicopters with an engine better suited high power-to-weight ratio. Turboshaft engines are also much better than internal combustion engines, especially when it comes generating the high amounts of power needed by helicopters.

6.1. Competitor Study for The Engine

Firstly, a competitor study has been done, and helicopters that are similar our design are being found. After finding the helicopters, the engines of the helicopters were being evaluated. List of engines are provided in Table 11.

Helicopter name	Engine	Max. Continuous Power [shp]	Power Output Shaft [rpm]	Weight [kg]	Sfc [lb/shp-hr] (max)	Model
Airbus H125 & H130	Arriel 2D	856	6,000	111	0.375	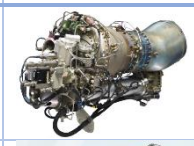
Airbus EC135	PWC 206B3	500-700 (Take-off/Cruise)	5,900	107.5	0.542	
Airbus EC120	Arrius 2F	449	5 610	101.3	-	
Bell-505	Arrius 2R	460	5 610	119.9	-	
MD-500	Allison250-C20	450	6,016	78.47	0.608	

Table 11 Engine Competitor Study [2 9 13 14 15 22 23 24]

According to R_F Method, the Rolls-Royce Allison Model 250-C20R turboshaft engine satisfies the desirable horsepower performance, dry weight characteristic, and power output shaft, which are the main considerations for our design helicopter. Another reason is that the engine is one of the most reliable and successful turboshaft engines ever produced. The number of Model 250 is over 30,000 since the 1960s and has proven reliability of over 180 million flight hours. Also, the Model 250-C20R is one of the latest models of the original engine, which provides a competitive performance for the market. The Model 250-C20R also gives power such as the AgustaWestland A109C, Bell 206B III, MD Helicopters MD500E, MD520N, Kamov Ka-226, and PZL SW-4. [

Furthermore, another reason is that since our helicopter is designed for Turkey, we consider the current helicopters made by Turkey. Such as Tai's GOKBEY and T129 ATAK helicopters.[26] Both helicopters are using the LHTEC CTS800 engine made by Rolls-Royce and Honeywell, so we concluded that choosing an engine made by Rolls-Royce would be more realistic in the manufacturing phase. Moreover, the Turkish Army uses Bell 206 helicopter for training purposes. The Bell 206 has 1 × Allison 250-C20J turboshaft engine, so the trained mechanics in the Turkish Army for the engine is sufficient. This also gives confidence for the engine. [5 19 20]

6.2. Additional Information on The Engine

The C20R engine is based on the proven design of the C20B/J engine. This engine features an advanced compressor with two less stages than the C20B yet delivers a higher-pressure ratio. The engine is available as an option on the Bell Helicopter Textron 206B III and the MD Helicopters MD500E for

improved hot/high performance. Additional improvements include an enhanced power turbine that provides up to a five percent increase in power and a two percent reduction in specific fuel consumption. Gearbox lip-seals and shaft journals have also been improved to help reduce oil consumption. These upgrades decrease the direct operating cost while increasing the value of the helicopters.

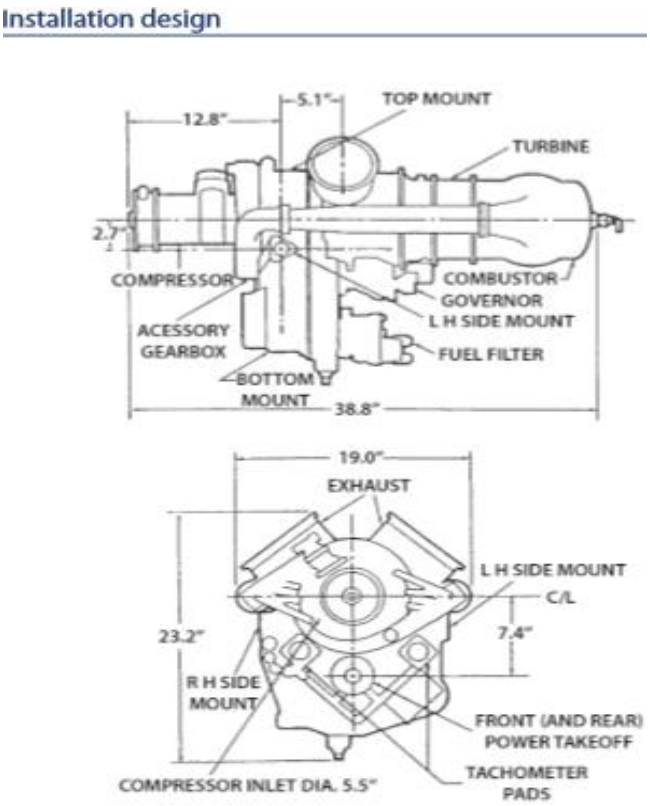

Figure 11 Installation Engine [22]

Basic engine specifications

Model 250	C20R
Weight	173 lb
Power / weight ratio	2.6:1
Airflow	3.82 lb/sec
Pressure ratio	7.9:1
Design speeds @ 100% rpm	
Power output shaft	6,016 rpm
Gas producer rotor	50,970 rpm
Power turbine rotor	33,2900 rpm
Fuels	JP-4, JP-5, JP-8, ASTM-1655, Type A, A1, B
Oils	MIL-PRF-7808, MIL-PRF-23699, DOD-85734
Type certificate number	E4CE

Performance

Sea level static rating	Minimum thermodynamic shaft horsepower	Sfc lb/shp-hr (max)
Model 250-C20R		
Takeoff (5 minute)	450	0.608
30 minute power	450	0.608
Max continuous	450	0.608
Normal cruise	380	0.631
Cruise A (90%)	380	0.631
Cruise B (75%)	317	0.666

Figure 5 Basic Engine Specifications and Performance [22]

6.3. Transmission Design

Power is transferred from the engine to the main rotor, tail rotor, and other accessories via the transmission mechanism. The main rotor transmission, tail rotor drive mechanism, and freewheeling unit are the main components of the transmission system. Transmissions in helicopters are usually lubricated and cooled using their own oil supply. A sight gauge is provided to check the oil level.[3]. Chip detectors are found in the sump of some transmissions. These detectors are wired to warning lights on the pilot's instrument panel that light up if metal shavings are found, implying an internal matter.

The engine as installed in the helicopter usually not deliver the same power as it does in the engine manufacturer’s test cell for a variety of reasons. Gearbox and transmission losses are produced by friction between the gear teeth and in the bearings and by aerodynamic drag or windage. The losses are a function of the size of the gearbox as well as the power being transmitted at any given time [23].

Transmission objectives:

- Should receive 450 shp from the engine.
- Provide 35 shp for the tail rotor at 4700 RPM.

- Transmit 315 shp to the main rotor at 378 RPM.
- Drive the 2 hydraulic pumps at 6000 RPM.
- Drive the 2 Alternators at 6000 RPM.

The transmission chart is provided in Table 12.

Transmission	input (rpm)	Number of Teeth	Output(rpm)	Number of Teeth	Gear Ratio
Engine to above bevel gear	6016	24	1519	95	4:1
Sun teeth to Planetory gears	1519	36	378	36	4:1
Below bevel gear to tail rotor	1519	90	4700	29	1:3
Below bevel gear to accessory gear box	1519	90	6000	23	1:4

Table 12 Transmission Chart

6.4. Conceptual Transmission Design

In this section, transmission components are designed conceptually where there is a need for iteration to achieve the best performance. Gear calculations are made simple for this stage since torque transmission and material selection are left for the detailed design step. The conceptual design of transmission is done using CAD software and can be found in Figure 13.

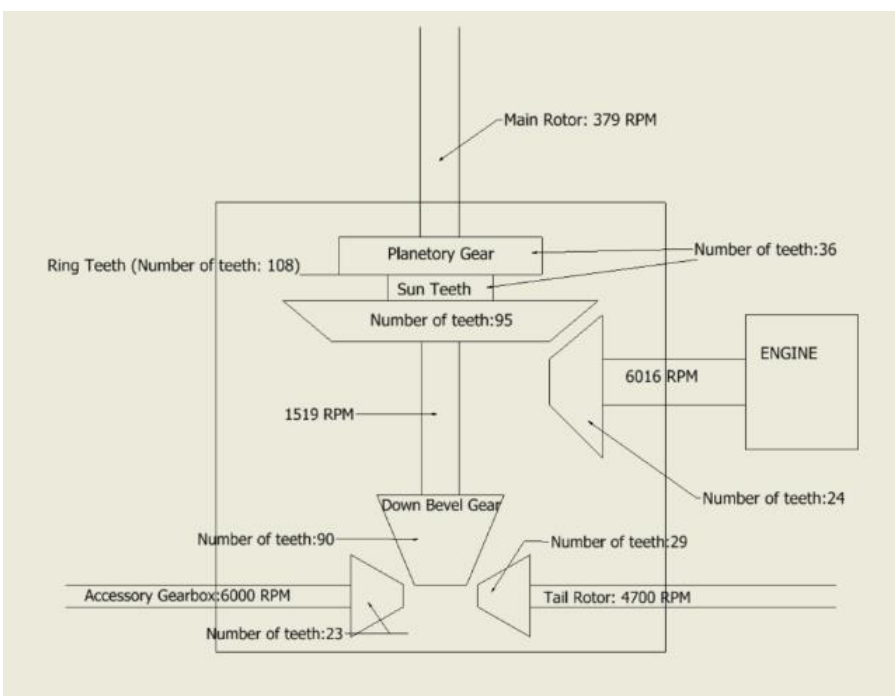

Figure 13 Conceptual Transmission Design

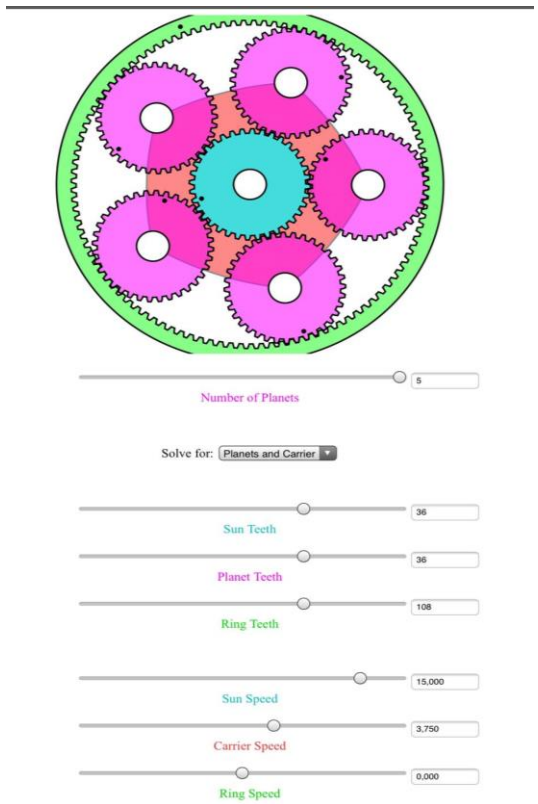

Figure 14 Planet Gear Calculation

7. Performance and Analysis

In this part of the design, a comprehensive research is done by group members to obtain important parameters and values for the best performance. Using Blade Element Momentum Theory for hover calculations, the power required for helicopter to hover is determined. Moreover, calculations and iterations are done to check whether the engine can produce enough thrust to lift the helicopter in hover condition and forward flight.

All calculations and iterations in this part of the design process are done using MATLAB software. Using Blade Element Momentum Theory for hover and using Momentum theory for forward flight, group members generated two separate MATLAB codes which are attached at the end of the report.

7.1. Hover Calculations

Since it is known that total weight of the helicopter must be equal to the thrust produced to satisfy the hover condition, all calculations and iterations are done considering the important variables such as air density, height, total weight, power available etc. Using the generated MATLAB code from Blade Element Momentum Theory, the variation of thrust values and required amount of power are obtained with respect to different chord lengths of main rotor airfoil. Comparing the outcomes, chord length is decided to be 0.36 m. Figure 15 and Figure 16 show the comparison of MATLAB outcomes at sea level and at 6000 ft, respectively.

	A	B	C	D	E
1	Sc-1095 at sea level c=0.36				
2	Chord Len	Kg	Power	Torque	Thrust
3	0.20	952,534	130,851	2465,02	9344,36198
4	0.21	990,021	138,246	2604,33	9712,101587
5	0.22	1026,91	145,655	2743,91	10074,02306
6	0.23	1063,24	153,075	2883,69	10430,34762
7	0.24	1099,01	160,503	3023,62	10781,28726
8	0.25	1134,25	167,937	3163,67	11127,03818
9	0.26	1168,99	175,374	3303,77	11467,78036
10	0.27	1203,23	182,812	3443,89	11803,688
11	0.28	1236,99	190,25	3584,01	12134,91719
12	0.29	1270,3	197,685	3724,07	12461,62189
13	0.30	1303,15	205,116	3864,06	12783,9436
14	0.31	1335,58	212,542	4003,95	13102,01274
15	0.32	1367,58	219,961	4143,71	13415,96014
16	0.33	1399,17	227,371	4283,32	13725,90347
17	0.34	1430,37	234,773	4422,75	14031,95526
18	0.35	1461,19	242,165	4562	14334,22556
19	0.36	1491,62	249,545	4701,03	14632,81716
20	0.37	1521,69	256,913	4839,84	14927,82394

Figure 15 Chord Length Trade at Sea Level

	A	B	C	D	E
1	Sc-1095 at 6000 ft c=0.36				
2	Chord Len	Kg	Power	Torque	Thrust
3	0.20	958,8031251	141,391135	2663,584677	9405,858657
4	0.21	997,4095465	149,5320602	2816,946794	9784,587652
5	0.22	1035,459044	157,6992294	2970,803306	10157,85322
6	0.23	1072,972283	165,8888755	3125,083246	10525,8581
7	0.24	1109,968468	174,0976244	3279,723051	10888,79067
8	0.25	1146,465862	182,3223469	3434,663777	11246,83011
9	0.26	1182,480857	190,560264	3589,853066	11600,13721
10	0.27	1218,029683	198,8087694	3745,241821	11948,87119
11	0.28	1253,1266	207,0655348	3900,786184	12293,17195
12	0.29	1287,785934	215,3283785	4056,44505	12633,18001
13	0.30	1322,020681	223,5953187	4212,181089	12969,02288
14	0.31	1355,843045	231,8645321	4367,959951	13300,82027
15	0.32	1389,265029	240,1343311	4523,749845	13628,68993
16	0.33	1422,297522	248,4031647	4679,521552	13952,73869
17	0.34	1454,95108	256,6695887	4835,247865	14273,0701
18	0.35	1487,235897	264,9322764	4990,903794	14589,78415
19	0.36	1519,161536	273,1899862	5146,465946	14902,97466
20	0.37	1550,736761	281,441588	5301,913034	15212,72762
21	0.38	1581,970614	289,6860172	5457,225	15519,13173
22	0.39	1612,871219	297,9222877	5612,38327	15822,26666
23	0.40	1643,446558	306,1494812	5767,370545	16122,21074

Figure 16 Chord Length Trade at 6000 ft.

7.1.1. Hover Ceiling

Using the generated MATLAB code for hover calculations, required powers are calculated for varying altitudes and they are listed in EXCEL sheet. Calculations are done at both ISA and ISA+20 °C. Below, Figure 17 and Figure 18 are obtained to determine the hover ceiling altitude at the intersection point of required power and power available. It can clearly be seen that hover ceiling altitude is 9000 ft at ISA conditions, where it is 6000 ft at ISA+20 °C conditions.

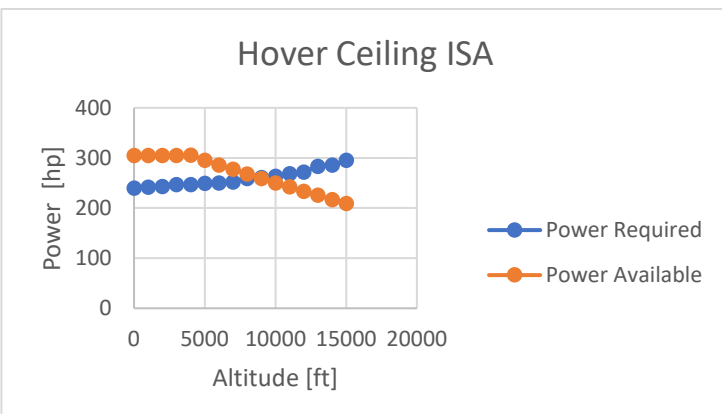

Figure 17 Hover Ceiling ISA

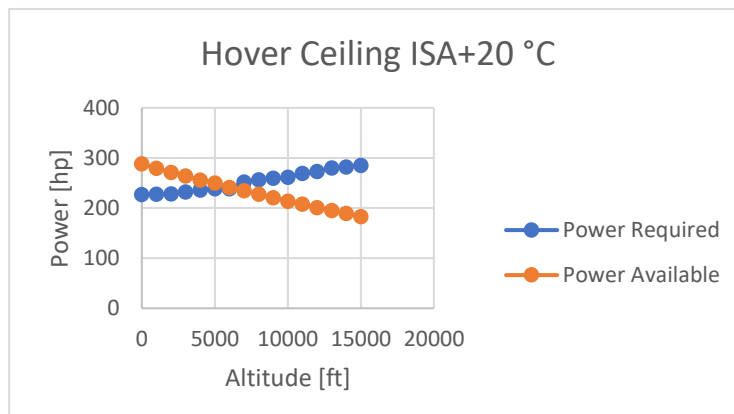

Figure 18 Hover Ceiling ISA+20 °C

7.2. Forward Flight Calculations

Coming to the forward flight calculations, Momentum Theory is used to generate a MATLAB code provided at the end of the report. Below, the outcome of calculations are provided as in two sections: at sea level ISA condition and at sea level ISA +20 °C condition. Forward flight parameters for different altitudes are also calculated and provided in the following chapters.

1. Sea Level ISA

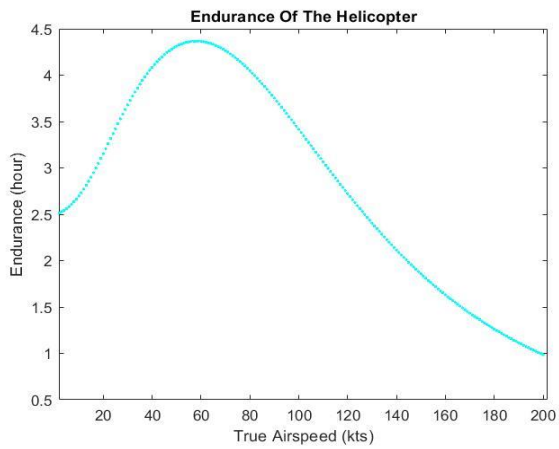

Figure 19 Endurance at Sea Level ISA

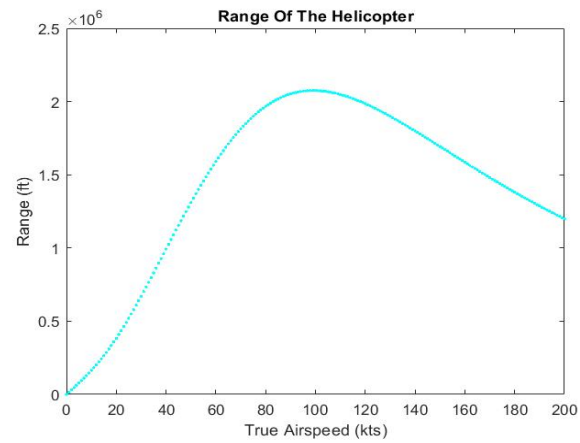

Figure 20 Range at Sea Level ISA

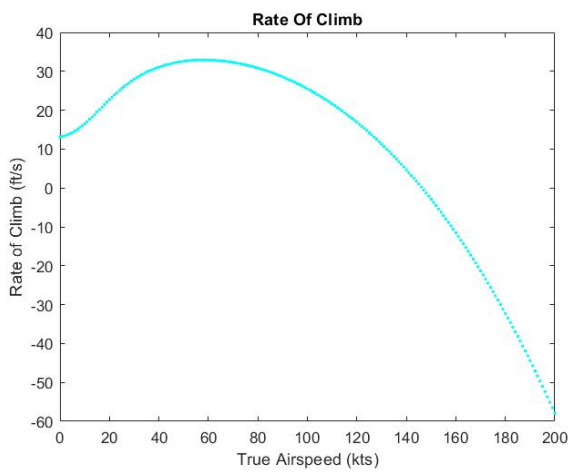

Figure 21 Rate of Climb at Sea Level ISA

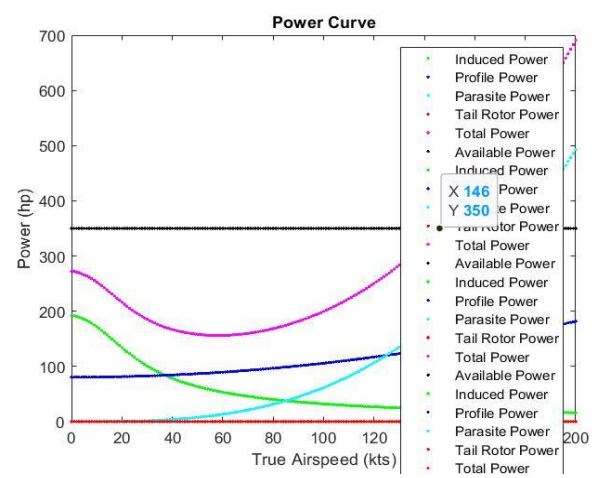

Figure 22 Power Curve at sea Level ISA

2. Sea Level ISA+20 °C

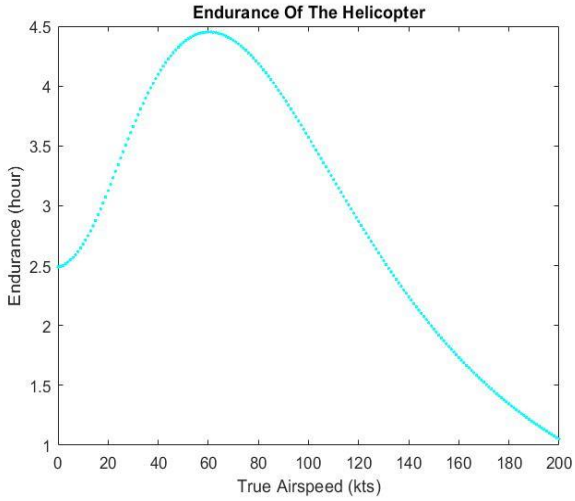

Figure 23 Endurance at Sea Level ISA+20 °C

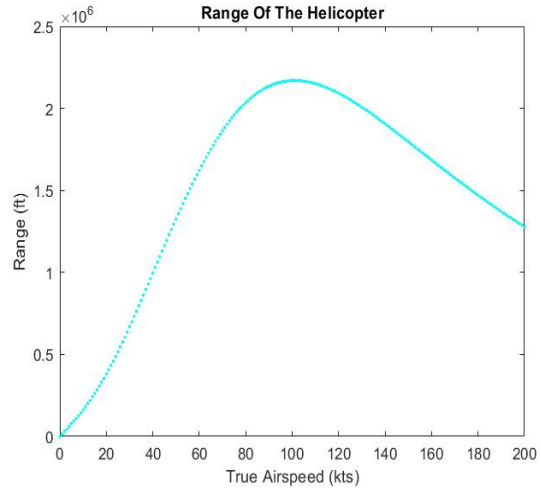

Figure 24 Range at Sea Level ISA+20 °C

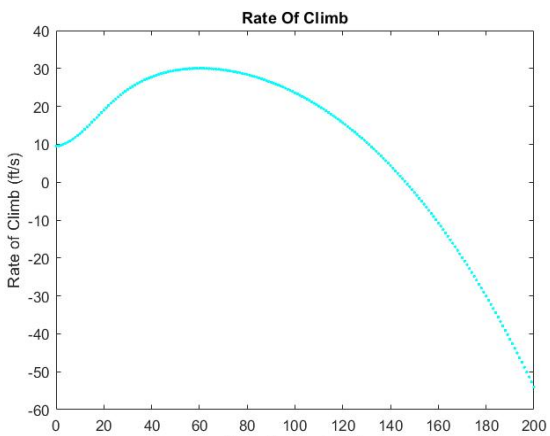

Figure 25 Rate of Climb at Sea Level ISA+20 °C

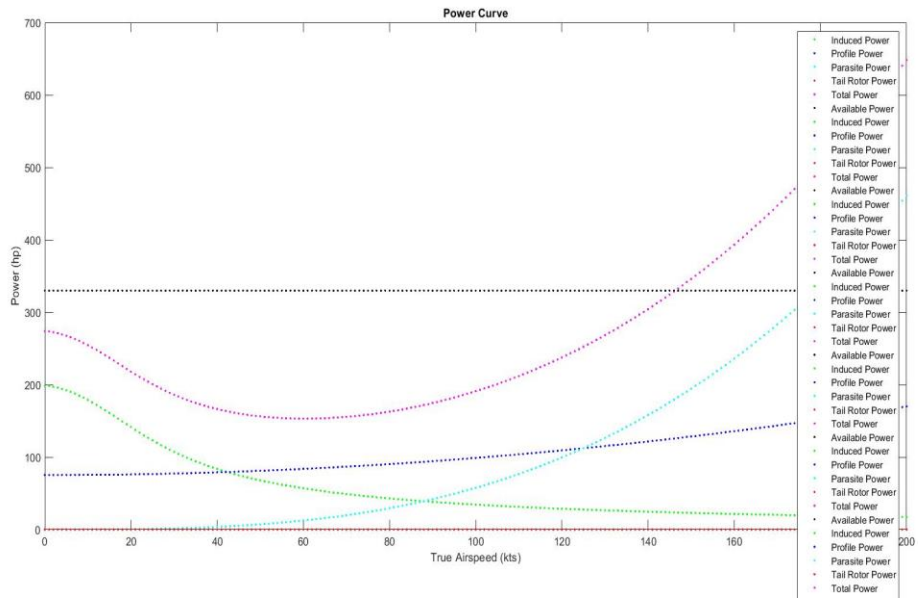

Figure 26 Power Curve at Sea Level ISA+20 °C

7.3. Performance Summary

Helicopter performance summary is provided in Table 13 as shown below.

	ISA	**ISA+20°C**
Maximum Velocity [KIAS]	146	144
Best Range Speed,V_{BR} [KIAS]	97	97
Best endurance Speed,V_{BE} [KIAS]	55	57
Best Climb Speed at V_{BE} [ft/min]	1900	1800
Hover Ceiling (HOGE) [ft]	9000	6000
Service Ceiling [ft]	20000	16000
Maximum Range [km]	609	659
Maximum Endurance [h]	4.36	4.45

Table 13 Performance Summary at sea Level, MTOW

Moreover, fuselage drag constant is estimated as 6 ft^2 based on historical data shown in Figure 27.

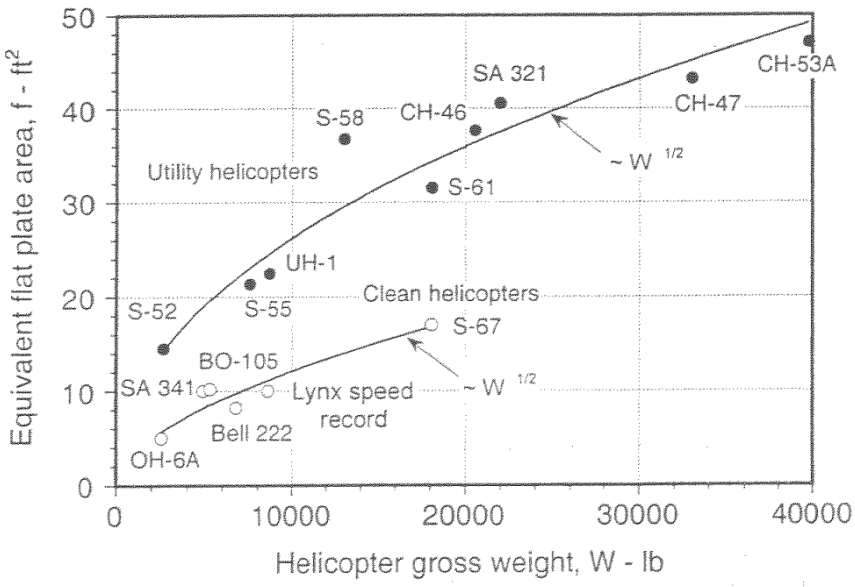

Figure 27 Historical Data for Fuselage Drag [18]

8. Specific Performance Requirements

8.1. Hover Capability-Range-Endurance

It is clearly shown in Table 13 that TLH-141 can hover at 6000 ft ((ISA+20°C MTOW). Moreover, the designed helicopter can fly a distance more than 500 km ((ISA+20°C MTOW) for more than 2.5 hours (ISA+20°C MTOW) and it is shown in the same table.

8.2. Power Loss Considerations

Before manipulating the performance calculations, power losses are considered so that the estimated calculations can be more precise and real. In that case, %20 of total power is said to be lost for the transmission purposes. Moreover, sub-system power requirements are said to be approximately 10 hp. Also, there will be power loss due to heat generation. [21] Taking all the circumstances into consideration, %20 of total power generated by the engine and additional 10 hp is said to be lost. All performance calculations are, then, done carefully to estimate the best performance of the helicopter.

8.3. Noise Reduction Considerations

Noise Reduction was one of the most important aspects of our design process. We managed to theoretically decrease the noise pollution of our design by applying some proven design points to our helicopter. Firstly, we started from the tail rotor, which is one of the greatest sources for noise pollution. By implanting a fenestron, a great source of noise, BVI (Blade Vortex Interaction) can be eliminated [1]. Also, fenestrons can have up to 12 blades unlike the conventional tail rotor designs. This decreases the noise produced by tail rotor since the blades are unevenly spaced and disturbs the air flowing in with different frequencies, which reduces the noise emission [7]. Additionally, fenestron reduces tip vortices. Thus, tail rotor can work more effectively and with lower RPM, which reduces the noise produced by the

tail rotor. Fenestron usage also reduces the vibration compared to conventional tail rotor designs. This reduces the noise produced in tail rotor section.

Secondly, we made a research on how to reduce the noise produced by the main rotor. We designed our helicopter to have 4 blades unlike most of the competitor helicopters, like EC-120 which has 3 blades. This gave us a chance to decrease the RPM of our helicopter. After our research, we found out that other than increasing the performance of the main rotor, swept-back tip design also reduces the noise produced by the main rotor. [25] This would increase the production level since it will require more complex manufacturing technics to produce a swept back rotor but considering the advantages in performance and noise reduction, we decided to use swept-back main rotor blades. In addition to these, we fixed the main rotor tip speed to 650 m/s. This value was chosen because the higher tip speeds increase the noise emission and lower tip speeds cannot withstand crosswinds and lift generation gets disturbed, which can result in accidents.

Finally, we concentrated on reducing the vibration of the helicopter. We decided to make dome and fuselage fairing. This improves aerodynamics efficiency of main rotor hub and the fuselage. Also, fairing reduces the drag and vibration caused by turbulent flows. This reduced vibration contributes to reducing the noise emission [8].

8.4. Autorotation Capability

The ability to autorotate is recognized as one of the inherent and desirable features of helicopters. Good autorotative capability is extremely important for single-engine helicopters since it is practiced extensively during pilot training. Any rotor will autorotate if the rate of descent is high enough and, in theory at least, a successful landing can be made from any rate of descent if the stored energy in the rotor is sufficient. [18]

For a given helicopter at a given gross weight, there is a unique combination of rate of descent, rotor speed, and blade pitch that defines the condition. Also, the decreased blade lift coefficient required for hover flight, as well as the lower blade inertia required for safe autorotation, became limiting factors. Autorotation, once established, is stable: if the rotor speed decreases, the horizontal velocity vector at the blade element will shorten, and the lift vector will be tilted further forward, thus tending to increase rotor speed. The opposite effect occurs if the rotor speed increases from its original value. Moreover, Inertia in the main rotor is valuable for two purposes: to prevent the rotor from decelerating too quickly following an unexpected loss of power, and to provide a source of energy for making a landing flare at the end of an autorotational descent. Furthermore, Low tip speeds have the advantage of low noise and good hovering performance. High tip speeds have the advantage of low rotor and drive system weights and high stored energy for autorotative entries and flares. Furthermore, forward flight speed is considered to be increased with a decrease in rotor rpm, but we did not do that in order not to lose from the autorotation capability.

8.5. Mission Profile Performance

A mission profile performance is calculation is done step by step to prove that TLH-141 can perform the mission requirements successfully. In the calculation, idle is considered to have zero lift condition with a power loss of %20 for transmission and 10 hp for other systems. The calculation for idle is done by using generated MATLAB code for hover using Blade Element Momentum Theory. In Take-off (HOGE) segment, calculation is done with the same MATLAB code to find fuel required for hover neglecting 2 minutes ground effect.

Performance for the mission profile is listed in Table 14.

#	Segment	Altitude and Temperature	Distance [km]	Duration [min]	Payload [kg]	Required Fuel	Fuel Remaining
1	Ground Run	3000 ft ISA+20°C	-	10 min	400 kg	2,3 kg	201,7 kg
2	Take-Off HOGE	3000 ft ISA+20°C	-	2 min	400 kg	3,17 kg	198,53kg
3	Climb at V_Y	4000 ft ISA+20°C	*	2 min	400 kg	2,06 kg	196.47
4	Cruise 130 kt speed	4000 ft ISA+20°C	150 km	37 dk	400 kg	46,15kg	150,32 kg
5	Landing HOGE	4000 ft ISA+20°C	-	1 min	400 kg	1,6 kg	148,72 kg
6	Ground Run	4000 ft ISA+20°C	-	1 min	0 kg	0,3 kg	148,42 kg
7	Take-Off HOGE	4000 ft ISA+20°C	-	1 min	0 kg	1,6 kg	146,82 kg
8	Cruise 130 kt speed	4000 ft ISA+20°C	150 km	37 dk	0 kg	43,03 kg	103,79 kg
9	Descent at V_Y	3000 ft ISA+20°C	*	2 min	0 kg	0,8 kg	103 kg
10	Landing HOGE	3000 ft ISA+20°C	-	2 min	0 kg	2,9 kg	100,1 kg
11	Reserve	4000 ft ISA+20°C	-	15 min	0 kg	15 minutes flight capability at V_{BE} with reserve fuel	54 kt V_{BE} 3 h 40 min

Table 14 Mission Profile Performance

9. Fuselage and Subsystems

9.1. Landing Gear

Our design uses composite landing skids. Skid design is chosen because of three main reasons. Firstly, skids are lighter than landing gears. Secondly, landing gears require high maintenance compared to skids. This would increase the hourly flight cost. Lastly, manufacturing landing gears is costly. Also, if the landing gears to be retractable, they would a portion of the fuselage since they would be store in the fuselage. We also decided to use composite material for skid, which will decrease the weight of the skid.

9.2. Engine

To select an engine, we had to calculate the power required for every part of the helicopter. We calculated the power required for the main rotor, tail rotor, avionics, hydraulics and for losses which are significant in transmission. After these calculations, we chose an engine which provides the required power and works efficiently. The selection procedure and details of the engine is given in the engine section.

9.3. Power Transmission

Our transmission system steps down the engine RPM so that the main rotor and tail rotor spin at the desired RPM. It is made of materials that can withstand the enormous stresses required to transmit engine power. More details are given in the corresponding section.

9.4. Main Rotor Hub

Among many concepts for main rotor hub, we chose bearingless main rotor hub. This type will reduce the maintenance requirements and cost of the helicopter. The main rotor has 4 blades. Details of sizing and design are given in the corresponding section for main rotor.

9.5. Tail Rotor

After a trade study, fenestron tail rotor is chosen. The choice was made because it is more silent and efficient than conventional tail rotor design. Also, it costs less than a NOTAR tail rotor design. A detailed explanation on why fenestron is chosen and how it is designed is given in corresponding section.

9.6. Fuel Tanks

Fuel tanks are placed according to safety regulations to keep the passengers safe in ca se of an emergency. They hold up to 450 lb. of Jet A-1 fuel used to fuel the turboshaft engine which powers the helicopter. These fuel tanks are placed on opposite sides to ensure that the fuel does not affect the stability of the helicopter as it is being consumed. Self-sealing fuel tanks are used to further increase the safety of the fuel.

9.7. Fuselage

Fuselage of the helicopter is designed to maximize the passenger comfort while minimizing the drag caused by the fuselage. It is finely faired to increase the aerodynamic efficiency. It provides a safe flight while it is lighter than its competitors. Because our fuselage is made composite materials.

10. Weight and Balance Estimations

According to Leishman's book, the weight and balance estimation is done by setting a scale which shows the weights of each component. Setting datum as the initial point of main rotor blade, a moment calculation is done. According to calculation result, center of gravity of TLH-141 is found to be at 5.1 m from the datum point. It is also important that center of gravity of the TLH-141 is almost aligned with main rotor disk. Calculated error is 0.099 which makes the computation accurate.

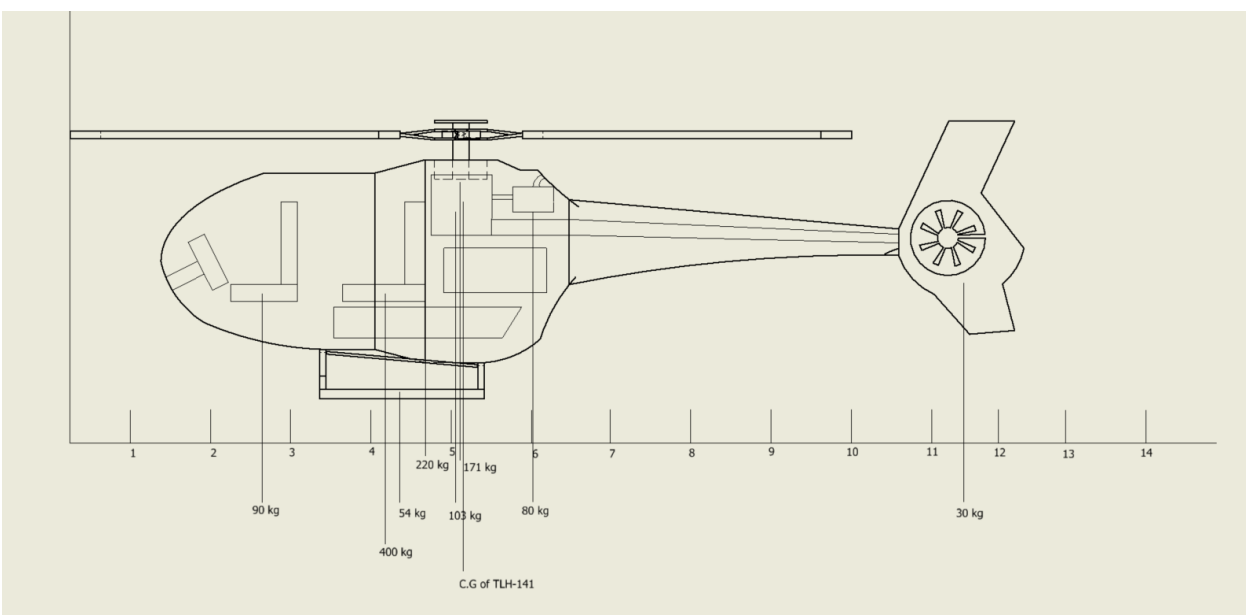

Figure 28 Center of Gravity Estimation

11.Avionic Suite

The avionic suite of the helicopter is listed below.

Thales Flytx Avionic Suite
Artificial Horizon Windshield-Mount
Genesys Helisas Autopilot System
Transponder in Lower Console
Pilot Side Accessory Bar
Other Standard Instruments

Figure 29 Thales Flytx Avionic Suite [10]

Figure 30 Artificial Horizon Windshield-Mount [11]

MATLAB CODES

Forward Flight Using Momentum Theory

```
clear
clc
close all
minvel=0;
maxvel=200;
velocity=minvel:maxvel;
alfa_deg=5;
alfa=alfa_deg*pi/180; %angle of attack (rad)
velct=0;
velc=velct*1.6878; %Climb Velocity in (ft/s)
rho=0.062675; % density
m=3240; %weight
r= 16.42; %main rotor radius
rtr=2.71; %tail rotor radius
chord=1.18; %chord length in ft
chordtr=0.295;  %tail rotor chord length
nb=4; %number of blades of main rotor
nbtr=2; %number of blades in tail rotor
dtr=20;
cd0=0.007;
cd0tr=0.007;
g=32.17; %Gravitational Acceleration
rpm=378;
rpmtr=2000;
hpav=304;
Pav=hpav*17696; %Available Power in (lb*ft^2/s^3)
mf=450; % fuel mass
sfchp=0.66; %specific fuel consumption (lb/(hp*h)
sfc=sfchp/17696;
n=1.75; %Load Factor For Turn Radius (Use Maximum Load Factor To Find Minimum Turn Radius
f=6; %Equivalent Flat Plate Area Of The Fuselage (ft^2)
k=1.15; %Induced power factor (Preferred Value is 1.15)
kk=4.7; %Correction parameter (Preferred Value is 4.7) ;
omega=rpm*2*pi/60; %Main Rotor Rotational Speed (rad/s)
omegatr=rpmtr*2*pi/60; %Tail Rotor Rotational Speed (rad/s)
vtip=r*omega; %Main Rotor Blade Tip Speed (ft/s)
vtiptr=rtr*omegatr; %Tail Rotor Blade Tip Speed (ft/s)
a=pi*r^2; %Area of The Main Rotor (ft^2)
atr=pi*rtr^2; %Area of the Tail Rotor (ft^2)
sigma=nb*chord/(pi*r); %Solidity of The Main Rotor
sigmatr=nbtr*chord/(pi*r); %Solidity of The Tail Rotor
w=m*g; %Weight of The Helicopter (lb*ft/s^2)
cw=w/(rho*a*vtip^2); %Coefficient of Weight
shp=17696; %hp to (lb*ft^2/s^3)
Pc=w*velc; %Climb Power (lb*ft^2/s^3)
hpc=Pc/shp; %Climb Power (hp)
cpc=Pc/(rho*a*vtip^3);  %Climb Power Coefficient
for j=1:length(velocity)
```

```
v=velocity(j)*1.6878; %forward velocity in ft/s
miu=v*cos(alfa)/vtip; %Main Rotor Advance Ratio
miutr=miu*vtip/vtiptr; %Tail Rotor Advance Ratio
landa=sqrt(cw/2); %Initial Guess Of The Main Rotor Inflow Ratio
for i=1:50
   landa=miu*tan(alfa)+cw/(2*sqrt(miu^2+landa^2)); %Main Rotor Inflow Ratio
end
cpi=(k*cw^2)/(2*sqrt(miu^2+landa^2)); %Main Rotor Induced Power Coefficient
cp0=sigma*cd0/8*(1+kk*miu^2); %Main Rotor Profile Power Coefficient
cpp=0.5*f/a*miu^3; %Parasite Power Coefficient Of The Helicopter
Pi=cpi*rho*a*vtip^3; %Main Rotor Induced Power
P0=cp0*rho*a*vtip^3; %Main Rotor Profile Power
Pp=cpp*rho*a*vtip^3; %Parasite Power Of The Helicopter
ttr=(Pi+P0+Pp)/(omega*dtr); %Tail Rotor Required Thrust
cttr=ttr/(rho*atr*vtiptr^2); %Thrust Coefficient Of The Tail Rotor
landatr=sqrt(cttr/2); %Initial Guess Of The Tail Rotor Inflow Ratio
for i=1:50
   landatr=v*sin(alfa)/vtiptr+cttr/(2*sqrt(miutr^2+landatr^2)); %Tail Rotor Inflow Ratio
end
cpitr=(k*cttr^2)/(2*sqrt(miutr^2+landatr^2)); %Tail Rotor Induced Power Coefficient
cp0tr=sigmatr*cd0tr/8*(1+kk*miutr^2); %Tail Rotor Profile Power Coefficient
Pitr=cpitr*rho*atr*vtiptr^3/550; %Tail Rotor Induced Power
P0tr=cp0tr*rho*atr*vtiptr^3/550; %Tail Rotor Profile Power
Ptr=Pitr+P0tr; %Tail Rotor Power
cp= cpi+cp0+cpp+cpitr+cp0tr+cpc; %Total Required Power Coefficient
P=Pi+P0+Pp+Ptr+Pc; %Total Required Power
shp=17696;
hpi=Pi/shp; %Induced Power In HP
hp0=P0/shp; %Profile Power In HP
hpp=Pp/shp; %Parasite Power In HP
hptr=Ptr/shp; %Tail Rotor Power In HP
hp=P/shp; %Total Required Power In HP
descend(j)=-cp/cw*vtip*60; %Vertical Autorotation Rate Of Descend (ft/min)
endurance(j)=mf/(P*sfc); %Endurance Of The Helicopter (Hour)
range(j)=mf*v/(P*sfc/3600); %Range Of The Helicopter (ft)
rc(j)=(Pav-P)/w; %Rate Of Climb ft/s
ld(j)=w*v/P; %L/D Of The Helicopter
radius(j)=v^2/(sqrt(n^2-1)*g); %Turn Radius For specific Load Factor
plot(velocity(j),hpi,'g.','DisplayName','Induced Power')
hold on
plot(velocity(j),hp0,'b.','DisplayName','Profile Power')
hold on
plot(velocity(j),hpp,'c.','DisplayName','Parasite Power')
hold on
plot(velocity(j),hptr,'r.','DisplayName','Tail Rotor Power')
hold on
plot(velocity(j),hp,'m.','DisplayName','Total Power')
hold on
plot(velocity(j),hpav,'k.','DisplayName','Available Power')
hold on
title('Power Curve')
```

```
xlabel('True Airspeed (kts)')
ylabel('Power (hp)')
legend('show')
end
figure
plot(velocity,descend,'c.')
title('Autorotation Descend Rate')
xlabel('True Airspeed (kts)')
ylabel('Descend Rate (ft/min)')
figure
plot(velocity,ld,'c.')
title('Lift to Drag Ratio vs Airspeed')
xlabel('True Airspeed (kts)')
ylabel('L/D')
figure
plot(velocity,rc,'c.')
title('Rate Of Climb')
xlabel('True Airspeed (kts)')
ylabel('Rate of Climb (ft/s)')
figure
plot(velocity,range,'c.')
title('Range Of The Helicopter')
xlabel('True Airspeed (kts)')
ylabel('Range (ft)')
figure
plot(velocity,endurance,'c.')
title('Endurance Of The Helicopter')
xlabel('True Airspeed (kts)')
ylabel('Endurance (hour)')
figure
plot(velocity,radius,'c.')
title('Turn Radius')
xlabel('True Airspeed (kts)')
ylabel('Turn Radius (ft)')
```

Hover Using Blade Element Momentum Theory

```
clear all;
%chord length of blade assumed constant with radius
chord=0.36;
%collective angle.
collective=14/180*pi;
%max cyclic angle.
cyclic=0.0/180*pi;
%diameter of the rotor
dia=10;
%tip radius
R=dia/2.0;
%rotor speed in RPM
RPM=378;
%thickness to chord ratio for propeller section (constant with radius)
tonc=0.095*chord;
```

```
%standard sea level atmosphere density
rho=1.225;
%RPM --> revs per sec
n=RPM/60.0;
%rps --> rads per sec
omega=n*2.0*pi;
% use 16 blade segments (starting at 20% R (hub) to 95%R)
rstep=(0.95-0.2)/16*R;
% forward velocity
V=0.0;
%tilt
tilt=0.0/180.0*pi;
% climb speed
Vc=0.0;
% max flapping velocity
vflap=0.0;
thrust=0.0;
torque=0.0;
Mx=0.0;
My=0.0;
%loop over each blade element
for i=1:16
 rad=((.95-0.2)/16*i+0.2)*R;
 r1(i)=rad/R;
 %loop over each angular sector
 for j=1:16
  psi=pi/8*j-pi/16;
  t1(j)=psi;
  %calculate local blade element setting angle
  theta=collective+cyclic*cos(psi)-(j*10*pi)/(16*180);
  sigma=2.0*chord/2.0/pi/rad;
  %guess initial value of induced velocity
  Vi=10.45;
  %set logical variable to control iteration
  finished=false;
  %set iteration count and check flag
  sum=1;
  itercheck=0;
  while (~finished)
   %normal velocity components
   V0=Vi+Vc+V*sin(tilt)+vflap*rad*sin(psi);
   %disk plane velocity
   V2=omega*rad+V*cos(tilt)*sin(psi);
   %flow angle
   phi=atan2(V0,V2);
   %blade angle of attack
   alpha=theta-phi;
   % lift coefficient
   cl=6.478*alpha;
   %drag coefficient
   cd=0.007-0.003*cl+0.01*cl*cl;
```

```
    %local velocity at blade
    Vlocal=sqrt(V0*V0+V2*V2);
    %thrust grading
    DtDr=0.5*rho*Vlocal*Vlocal*2.0*chord*(cl*cos(phi)-cd*sin(phi))/16.0;
    %torque grading
    DqDr=0.5*rho*Vlocal*Vlocal*2.0*chord*rad*(cd*cos(phi)+cl*sin(phi))/16.0;
    %momentum check on induced velocity
    tem1=DtDr/(pi/4.0*rad*rho*V0);
    %stabilise iteration
    Vinew=0.9*Vi+0.1*tem1;
    if Vinew<0,
     Vinew = 0;
    end;
    %check for convergence
    if (abs(Vinew-Vi)<1.0e-5),
     finished=true;
    end;
    Vi=Vinew;
    %increment iteration count
    sum=sum+1;
    %check to see if iteration stuck
    if (sum>500),
     finished=true;
     itercheck=1;
    end;
   end;
   val(i,j)=alpha;
   thrust=thrust+DtDr*rstep;
   torque=torque+DqDr*rstep;
   Mx=Mx+rad*sin(psi)*DtDr*rstep;
   My=My+rad*cos(psi)*DtDr*rstep;
  end;
end;
for i=1:16,
 for j=1:16,
  x(i,j)=r1(i)*cos(t1(j));
  y(i,j)=r1(i)*sin(t1(j));
 end;
end;
%contour(x,y,val,50);
%axis equal;
power=torque*omega;
hp=power*0.00134102;
kg=thrust/9.81;
thrust
torque
Mx
My
```

REFERENCES

[1] Airbus. (2020, February 20). Quiet, please! Retrieved from https://www.airbus.com/newsroom/stories/quiet-please.html

[2] Airbus helicopters Ec135 - AIRLIFT - HELICOPTER charter - HELICOPTER RENTAL. (2020, January 28). Retrieved from https://www.airlift.gr/our-fleet/airbus-ec135/

[3]Alc_content. (n.d.). Retrieved from https://www.faasafety.gov/gslac/ALC/course_content.aspx?cID=105&sID=461&preview=true

[4] Bell 206. (2021, April 04). Retrieved from https://en.wikipedia.org/wiki/Bell_206

[5] Bell 505 Jet Ranger X. (n.d.). Retrieved from https://www.bellflight.com/products/bell-505

[6] Bousman,W , 2003, Aerodynamic Characteristics of SC1095 and SC1094 R8 Airfoils,. (n.d.). Retrieved from https://rotorcraft.arc.nasa.gov/Publications/files/Bousman_NASA_TP_03.pdf

[7] Colonges, Monique. "History of the fenestron." *Airbus Helicopters*, Retrieved: 16 April 2018.

[8] Crane & Dale (1997). "Dictionary of Aeronautical Terms1" Third Edition. Aviation Supplies & Academics Inc, Newcastle Washington.

[9] Eurocopter EC120 Colibri. (2020, December 03). Retrieved from https://tr.wikipedia.org/wiki/Eurocopter_EC120_Colibri

[10] Flytx New Generation Avionics Suite for Helicopter Connected Cockpits.(n.a.).(n.d.). Retrieved from https://www.thalesgroup.com/en/markets/aerospace/flight-deck-avionics-equipment-functions/flytx-new-generation-avionics-suite

[11] GARMIN. GI275. Retrieved from https://buy.garmin.com/en-US/US/p/719027

[12] GÖKBEY. (n.d.). Retrieved from https://www.tusas.com/urun/gokbey

[13] H125. (n.d.). Retrieved from https://www.airbus.com/helicopters/civil-helicopters/intermediate-single/h125.html#infographics

[14] H130. (n.d.). Retrieved from https://www.airbus.com/helicopters/civil-helicopters/intermediate-single/h130.html#aircraft

[15] H135. (n.d.). Retrieved from https://www.airbus.com/helicopters/civil-helicopters/light-twin/h135.html#aircraft

[16] Hanson, Thomas F. A Designer Friendly Handbook of Helicopter Rotor Hubs, 1998.

[17] Helicopter. (2021, March 05). Retrieved from https://en.wikipedia.org/wiki/Helicopter

[18] Leishman. (n.d.). *Principles of Helicopter Aerodynamics*.

[19] MD 500e. (n.d.). Retrieved from https://www.mdhelicopters.com/md-500e.html

[20] Model 250-C20R. (n.d.). Retrieved from https://www.gra-cv.com/brev/images/allison_250_c20r.pdf

[21] Prouty, R. (n.d.). *Helicopter Performance, Stability, and Control*.

[22] Safran 2011 ARRIEL 2d sn 50025 - AERO ASSET. (n.d.). Retrieved from https://www.aeroasset.com/safran-arriel-2d-sn50025.html

[23] Safran Helicopter Engines Arrius 2F Engines. (n.d.). Retrieved from https://www.easa.europa.eu/sites/default/files/dfu/EASA_E%20031_issue%2005_%2020200707_0.pdf

[24] Safran Helicopter Engines Arrius 2F Engines Turbomeca Datasheet. (n.d.). Retrieved from https://www.safran-helicopter-engines.com/sites/turbomeca/files/datasheet_arrius2r.pdf

[25] SC-1095. (n.d). Retrieved from http://airfoiltools.com/airfoil/details?airfoil=sc1095-il

[26] T129 atak. (n.d.). Retrieved from https://www.tusas.com/urun/T129-ATAK

[27] Wang, B., Zhao, Q., Xu, G., Ye, L., & Wang, J. (2013, May 09). "Numerical analysis on noise of rotor with Unconventional blade tips based on CFD / Kirchhoff method." Retrieved from https://www.sciencedirect.com/science/article/pii/S1000936113000964

TEAM INFORMATION

Mustafa Ersin KARPAT:

2010 Army Aviation Flight School (Helicopter Pilot)

2013 İTÜ Rotorcraft Technologies (Master's Degree)

2000+ Total flight hours, 500+ instructor hours on AB-206, UH-1, S-70 helicopters .

Tuğba MACİT:

Senior student of METU NCC Aerospace Engineering

Internship in THY Flight Academy

Responsible of aerodynamic calculation and preparing the report.

Konuralp CANBAZGİL:

2013 Turkish Aeronautical Association Glider Pilot Beginner Certificate

2016-2021 METU NCC Aerospace Engineering

Responsible of aerodynamic calculations and design

Emir GENÇ:

3rd year student of METU NCC Aerospace Engineering

Responsible of CAD drawings and aircraft geometry.

Berk Gürbüz BİÇEN:

2016 Model Aircraft Instuctor(FAI)

2015-2021 METU NCC Aerospace Engineering

Responsible of Engine and Transmission Design