TEKNOFEST 2021

AEROSPACE AND TECHNOLOGY FESTIVAL

TECHNOLOGY FOR HUMANİTY COMPETITION

PROJECT DETAIL REPORT

PROJECT CATEGORY:	Disabled Friendly
PROJECT NAME:	Talking Color Blind Assisstant
TEAM NAME:	Fullmetal Physicist
TEAM ID:	60076
TEAM LEVEL:	Middle School Level
TEAM MEMBER:	Muhammad Hadi Gondal
ADVISOR NAME:	Bazla Sarwar
Visual application	**https://youtu.be/8A_jOtg1yCc**

Project Detail Report

1. Project Summary:

Color blindness is an often misunderstood condition. Many assume because of its name that "color blind" means a person can only see in black and white. In actuality, the vast majority of people with color blindness do see color, but they see a much narrower range of color. It is estimated that a person with normal color vision can see up to 1 million distinct shades of color, but a person who is color blind may see as few as just 10 thousand colors (1% of the normal range).

Color blindness is caused by a change or reduction of sensitivity of one or more of the light-sensitive cone cells in the eye. The human eye contains millions of cone cells which work together to translate light into neural signals that are transmitted along the optic nerve to the brain, resulting in the sensation of color vision. The most common type of color vision deficiency is called "red-green color blindness" which occurs when the green and red sensitive cone cells' sensitivities overlap more than they are supposed to. Instead of seeing green and red as distinct colors, the person sees them as being very similar, thus the resulting color confusion and other frustrations.

In this work, we are proposing a handheld real-time automated guidance system to identify the colour name for colour blind persons and also speak the said recognized color through a speaker that will help to identify colors which they can't do using natural eyes. This project will accomplish the feat of identifying a primary color and relaying the news to the color-blind person through an LCD as well as speaking it out loud through a speaker. The three colours are Red, Green and Blue. Though these are only three colours they will make all the difference in a color-blind person's life. He or she will be able to tell if a piece of paper is red blue or green, a comofort we enjoy, without realising the beauty of it. For us it is, to some extent, seemingly useless but for a colour blind person this invention is equivalent to the invention of wheel.

2. Problem/ Issue:

Color confusion can manifest in many everyday tasks, resulting in frustrating outcomes such as a mismatched outfit, questionable paint choices, incorrect color naming and difficulty interpreting color coded information such as charts, graphs and maps, which may be misconstrued as a learning disorder in early education.

Another task that can be frustrating is driving a car when color blind; for the color blind person, green light tends to look very pale green or nearly white, and red light may seem closer to orange. Color blind drivers often say they look more for the traffic light's position than its actual color. Problems also arise when traffic lights are oriented differently than their typical vertical configuration (i.e. sideways, read left to right). If you encounter a driver who hesitates or slows at green lights, consider that they may be a color blind driver looking out for your safety and theirs. The variability of traffic light positions and non-

color blind friendly colors pose a unique problem for color blind drivers that can potentially lead to unsafe situations.

Normal Color Vision Deuteranomaly Color Blindness

1. **Deutan color blindness** is a form of red-green color blindness characterized by the shifting of green light-sensitive cone cells closer to red-sensitive cells than is normal. This causes "green-deficient" color blindness.
2. **Protan color blindness** is a form of red-green color blindness characterized by the shifting of red light-sensitive cone cells closer to green-sensitive cells than is normal. This causes "red-deficient" color blindness.
3. **Tritan color deficiency** is most commonly acquired later in life due to aging of the eye or medical complications. It is characterized by a reduction in the sensitivity of the blue light-sensitive cones such that blue shades seem darker and less vibrant. In extremely rare cases tritanopia can be inherited also.
4. **Achromatopsia** is also known as "complete color blindness" and is the only type that fully lives up to the term "color blind". It is extremely rare, however, those who have achromatopsia only see the world in shades of grey, black and white. In some cases low vision disorders such as progressive cone dystrophy can cause a gradual deterioration of color vision that eventually turns into complete achromatopsia.

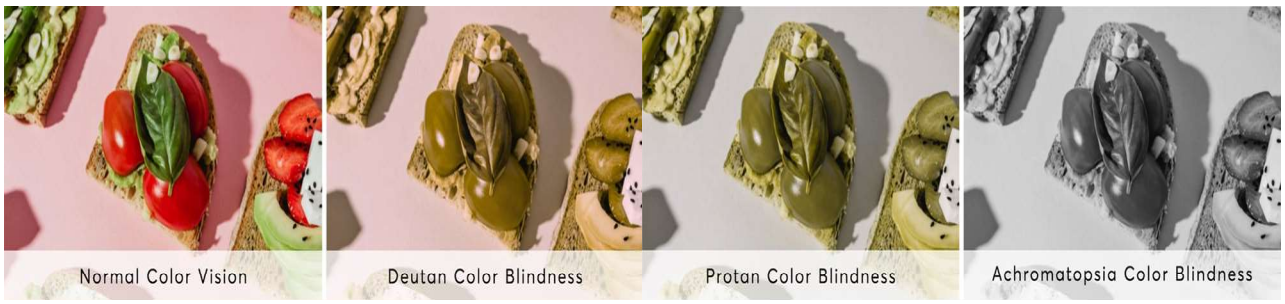

And in Japan, instead of green, blue light is used.

3. **Solution**

This project will be introducing the Color Sensor for Color Blindness (targeting red-green blindness). The main function of the project is TCS3200 Arduino Color Sensor; however, we advanced it into a new level that could help color blindness in their daily life. Because they are not able to recognize red and green, so this project is designed to determine the color by sensing the color for them, presenting it on the LCD monitor and speaking through the connected speaker, and playing a short but identical rhythm for them to identify the color.

4. **Method**

The colour sensor detects the frequency of the light ray it touches and measures it, therefore identifying the color of the light. The data is transmitted to and LCD which displays it to the user and also speaks it through the audio speaker.Color sensor TCS3200 is a programmable color light-to-frequency converter that combines configurable silicon photodiodes and a current-to-frequency converter on a single monolithic CMOS integrated circuit.

The output is a square wave (50% duty cycle) with frequency directly proportional to light intensity (irradiance). The full-scale output frequency can be scaled by one of three preset values via two control input pins (S0 and S1). Digital inputs and digital output allow direct interface to a microcontroller or other logic circuitry.

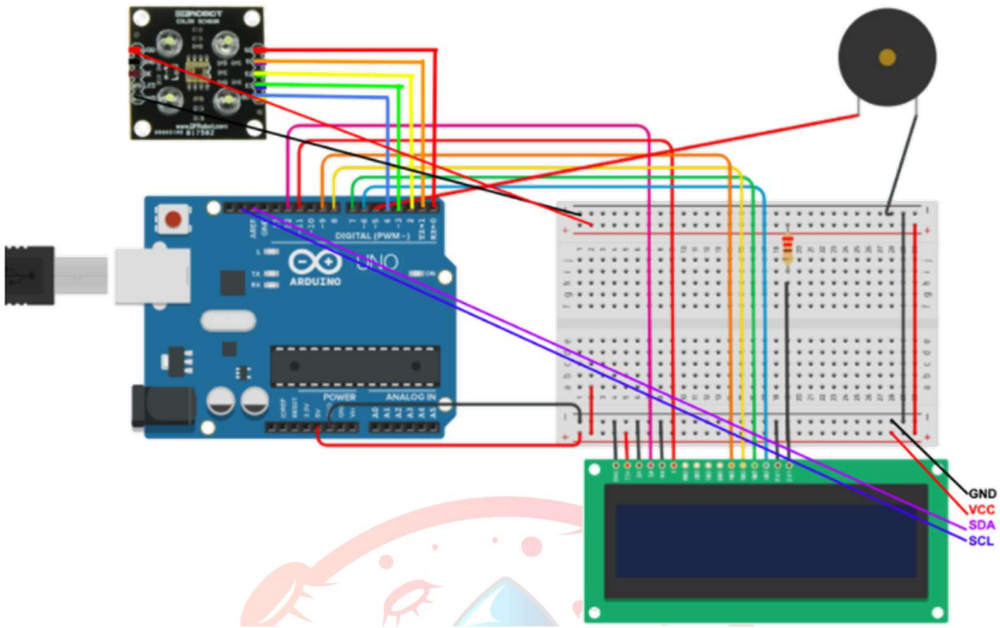

Output enable (OE) places the output in the high-impedance state for multiple-unit sharing of a microcontroller input line. In the TCS3200, the light-to-frequency converter reads an 8 x 8 array of photodiodes.

- Sixteen photodiodes have blue filters
- 16 photodiodes have green filters
- 16 photodiodes have red filters
- 16 photodiodes are clear with no filters.

Pins S2 and S3 are used to select which group of photodiodes (red, green, blue, clear) are active.

Photodiodes are 110 µm x 110 µm in size and are on 134-µm centers.

The OE (Enable) should be connected to GND (LOW).

The sensor is encapsulated and should be powered between 2.7 and 5.5 VDC. We will use the 5V Arduino output to power the sensor. In order to properly use the sensor, we will install a small rubber ring to isolate the sensor from lateral light. I used hot glue to fix it.

Add the code (Code Link-https://create.arduino.cc/editor/kaokaokaokao/6385...)

Schedule:

	Dec. 20	Jan 21	Feb 21	Mar. 21	Apr. 21	May 21	June 21	July 21
Developing research proposal								
Literture Review								
Developing questions for data collection								
Specified detail requirement								
Develop prototype								
Approval of prototype								
Final correction application								
Final prototype and testing								
Users								

5. **Innovative Aspect**

This project will allow 8% of the world's population to be able to see completely again and help 2% more to partially recognize colors of the world. For this 2 percent, the project can be modified to fit a better sensor toeven accommodate them in recognizing each and every color. This provides them with basic knowledge to colors and all connected activities. This changes the prospect of life dramatically. Thus, this project be an important asset for a color blind person's life.

This project will help a person sense the basic colors to his life, namely red, green and blue. This provides him with basic knowledge to colors and all connected activities. He or she will know wether the piece of cloth in his hand is red blue or green.this changes his prospect of life drammatically. İncidentally 42% of the males andd 30% of the females' favorite colours fall in these three colours.

İt is also easy to carry everywhere.

İt will also be helpful to use suring driving car, motorbike or bicycle (during which mobile phone is not allowed to use.)

İt will be helpful for the people who walk on streets of the World.

İt also does not require internet (like mobile phone apps)

İt is also cost effective and reachable for all kind of people unlike labours or poor people wjo can not afford the smart phone. Some important color blind personalities, such as Bill Clinton, are able to buy enchroma glasses, a costly solution to the syndrome. But for the majority of the affected populace, there is no solution. Our design is 82% cheaper.

6. **Applicability**

This project is small and so can be taken anywhere with the user and help him/her complete his/her day to day jobs, and wherever the services of the sensor are required, the user can easily take it out, turn it on and point it at the object whose color he/she wants to identify.

The video link has ben shared here for your reference to check the working/Application of the project.

Video link: **https://youtu.be/8A_jOtg1yCc**

7. **Estimated cost and Project Scheduling**

The estimated cost of this project is approximately 6000 rupees(333 Turkish lira) This cost includes all the components for the project which are:

- Arduino UNO = Rs. 1250
- TCS3200 color sensor = Rs. 500
- Micro sd card slot = Rs. 1500
- LCD = Rs. 300
- Motherboard = Rs. 400
- Speaker = Rs. 700
- Box for covering = Rs. 500
- Nails, tapes accessories = Rs. 1000

8. **Target Group of the Project Idea (Users):**

This project will be used by partially, or completely color blind people, who are extremely disadvantaged, living a (literally) color-less life, with no-one to think about them.

People of all genre.

My family who has colour blindness in genes.

This prototype can also be used by old people who develops low vision due to aging.

9. **Risks**

Another advantageous feature of this design is that it does not have any fatal or otherwise dangerous side effects, because it's small parts are encased, therefore nullifying all choking hazard for kids. As the batteries are very weak, electric shocks are remote.

Can not be thrown for the intactness of the parts.

Can be water proof if sealed.

Week range sensors are used in this prototype which can only detect less range color. But using the strong sensors, the long range can be covered.

10. **Future Aspect:**

- This prototype can be made more user friendly and cheap thus replacing Enchroma glasses which are way too costlier.
- With help of polyglot many types of languages can be added in the gadget in order to make it available to each and every person living in any part of the world.
- The whole prototype can be converted wirelessly by using bluetooth sensor device.
- This prototype can also be used for secondary colour detection after using the complete colour sensor kit (which includes 24 colours).
- Long range color sensor can be used to detect the colors which is our future goa.

11. **Resources**

- Asim Kumar Roy Choudhury. Unusual visualphenomena and colour blindness. In:Principlesof Colour andAppearance Measurement. 2014,Pages 185-208,209e-224e,209-220.

- Luigi F. Cuturi, Elena Aggius-Vella, ClaudiaCampus, Alberto Parmiggiani,Monica Gori.From science to technology:Orientation andmobility in blind children and adults.In:Neuroscience and Biobehavioral Reviews.

  Stuart W.Teplin, Judith Greeley, TanniL.Anthony. Chapter 71-Blindness and VisualImpairm. In:Development-BehavioralPediatrics(Fourth Edition) 2009, Pages 698-716

- Chaitali Kishor Lakde, Dr.PrakashS.Prasad.Microcontroller based Navigation System for VisuallyImpaired People. In:International Journal of AdvancedResearch in Computer and Communication Engineering.Volume 4, Issue 8, August 2015
- https://www.instructables.com/Arduino-Color-Sensor-for-Color-Blindness/
- https://www.google.com/url?sa=t&source=web&rct=j&url=https://www.circuito.io/&ved=2ahUKEwjHuOnTl7DxAhUyQkEAHRpdAakQFjAAegQIBRAC&usg=AOvVaw2FnH4aViX55n1FG8RZdAdk&cshid=1624534789133

Promo